STANDARD DETAILS INDEX

City of Jenks

STANDARD NO.	DATE	STANDARD DETAIL NAME
BOR-01	02/08	Pipe Bore Detail
EC-01	09/12	Straw Wattle Installation Detail
METER-01	10/05	3/4" and 1" Meter Setting
METER-02	10/05	2" Meter Setting
SAN-01	02/08	Pipe Installation
SAN-02	02/08	Precast Manhole / Drop Manhole
SAN-03	02/08	Manhole Steps & Invert Details
SAN-04	02/08	Sanitary Sewer Manhole Pipe Connector
SAN-05	08/15	Private Sewer Grinder Pump Connection to Force Main
STRM-01	02/05	Storm Sewer Pipe Installation
STRM-02	02/05	Storm Sewer Inlet Frame Type A
STRM-03	02/05	Area Inlet
STRM-04	02/05	Manhole Frame & Cover
STRM-05	02/08	Curb Inlet (Sheet 1)
STRM-06	02/08	Curb Inlet (Sheet 2)
STRM-07	02/08	Configuration of Cast Iron Curb Inlets
STRM-08	02/08	Storm Sewer Inlet Frame Type A
STRM-09	02/08	Storm Sewer Inlet Frame Type B
STRM-10	02/08	Headwall (Sheet 1)
STRM-11	02/08	Headwall (Sheet 2)
STRM-12	12/13	River Bank Outfall Detail
STRM-13	12/13	Stabilized Construction Entrance
STRM-14	01/14	Outlet Pipe Detail
STRT-01	12/05	Residential Minor Street
STRT-02	12/05	Residential Collector Street
STRT-03	12/05	Secondary / Primary Arterial Street
STRT-04	02/09	Street Replacement for Utilities
STRT-05	07/09	Curb, Gutter and Sidewalk
STRT-06	05/13	Commercial / Industrial Collector Street
STRT-07	05/13	Commercial Collector Street
WAT-01	06/13	Water Pipe Installation
WAT-02	01/05	Valve Box Detail
WAT-03	06/13	Installation of 3-Way Fire Hydrant
WAT-04	02/08	Mechanical Restraint for Joints
WAT-05	02/08	Air Relief Valve & Vault

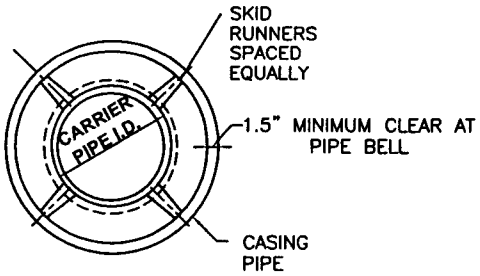

SECTION A–A

PVC LINE	CASING DIA.	RCP C–303	CASING DIA.	RCP C–301	CASING DIA.	DIP LINE	CASING DIA.
1"	4"	12"	20"	—	—	8"	20"
1 1/2"	6"	16"	30"	16"	30"	10"	24"
2 1/2"	6"	20"	30"	20"	36"	12"	30"
3"	6"	24"	36"	24"	42"	16"	36"
4"	8"	30"	42"	30"	48"	20"	42"
6"	12"	36"	48"	36"	54"	24"	48"
8"	16"	42"	54"	42"	60"	30"	54"
10"	18"	48"	60"	48"	66"	36"	60"
12"	20"	54"	66"	54"	72"	42"	66"
						48"	

1. REFER TO PLAN & PROFILE FOR CASING SIZE & LENGTH.
2. SKID ASSEMBLIES SHALL BE THOSE MANUFACTURED BY PIPELINE SEAL AND INSULATOR, INC; CASCADE WATER WORKS MANUFACTURING COMPANY; OR APPROVED EQUAL.
3. EACH END OF CASING SHALL BE SEALED WITH A WATER–TIGHT, REMOVABLE SEAL.
4. FOR INDIVIDUAL CARRIER PIPE SECTIONS OF TWELVE (12) FEET OR LESS IN LENGTH, A MINIMUM OF THREE (3) SKID ASSEMBLIES ARE REQUIRED.
5. ALL CARRIER PIPE SHALL HAVE MECHANICALLY RESTRAINED JOINTS.
6. BANDED WOODEN SKID ASSEMBLIES WITH SAND FILL ARE NOT ALLOWED.
7. SAND FILL IS NOT REQUIRED FOR FOR SPECIFIED SKID ASSEMBLIES.

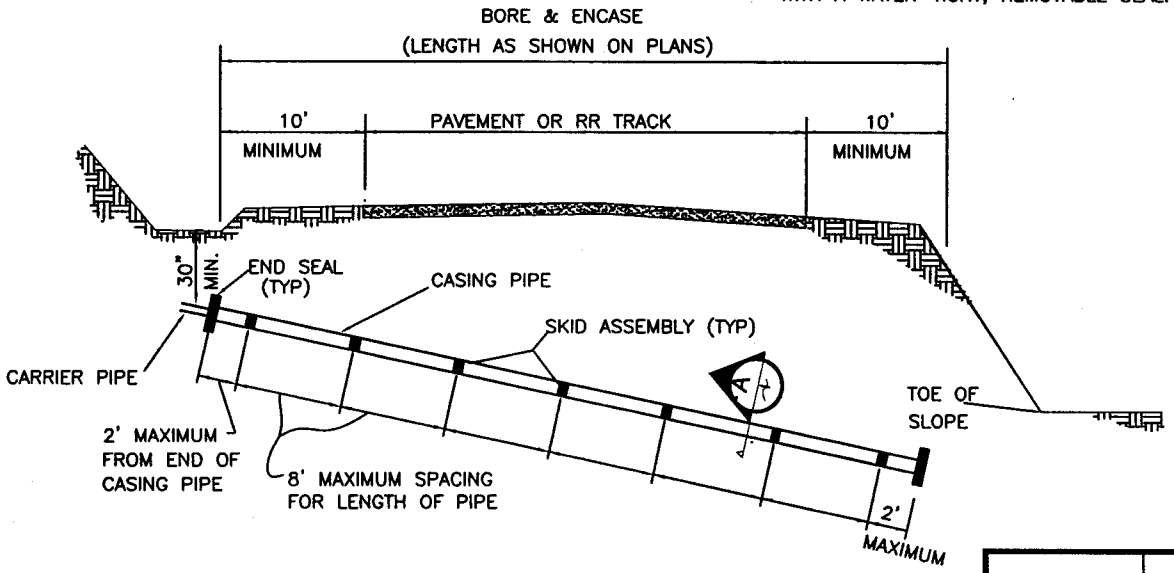

REVISION	BY	DATE

PIPE BORE DETAIL

STANDARD DETAILS

CITY OF JENKS, OKLAHOMA

PUBLIC WORKS DEPARTMENT

DATE: 02/08

STANDARD NO. BOR-01

G:\STANDARD DETAILS\BORE DETAIL\BOR-1.DWG

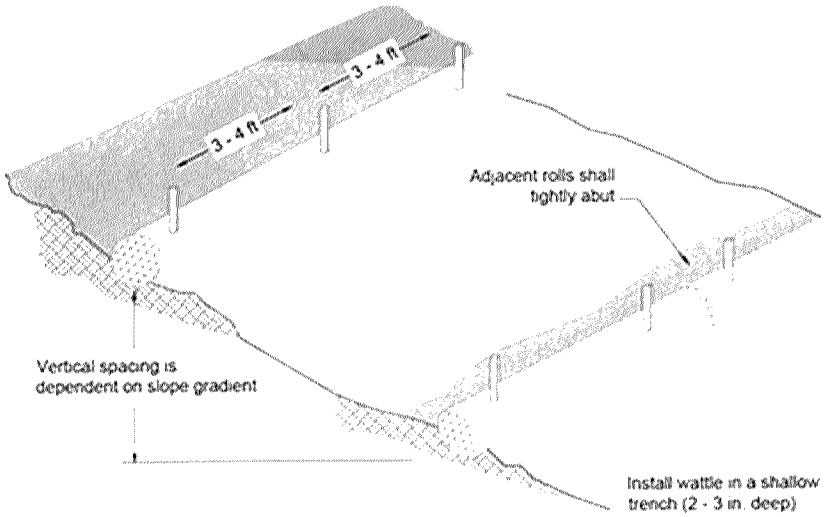

Typical Wattle Installation Guide

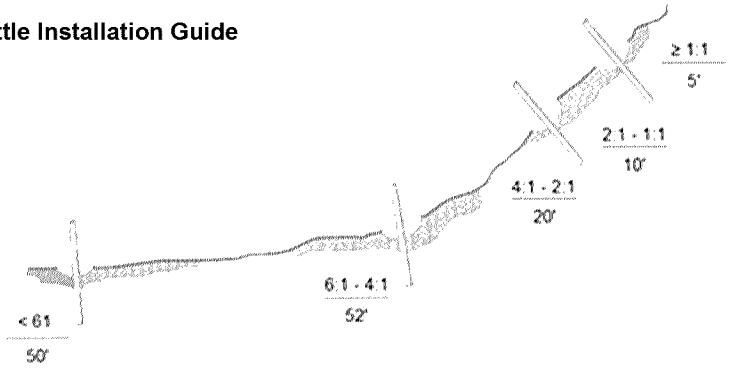

Typical Wattle Spacing based on Slope Gradient

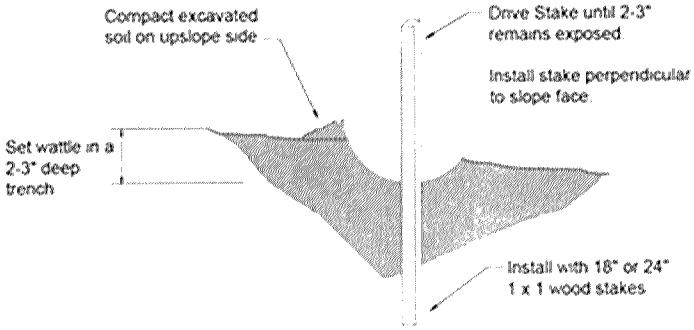

Enrichment Detail

NOTES:

1. Begin at the location where the wattle is to be installed by excavating a 2 – 3" deep x 9" wide trench along the contour of the slope. Excavated soil should be placed up-slope from the anchor trench.
2. Place the wattle in the trench so that it contours to the soil surface. Compact the soil from the excavated trench against the wattle on the uphill side. Adjacent wattles should tightly abut.
3. Secure the wattle with 18 – 24" stakes every 3 – 4" with a stake on each end. Stakes should be driven through the middle of the wattles leaving at least 2 – 3" of stake extending above. The wattle stakes should be driven perpendicular to slope face.

REVISION	BY	DATE	**STRAW WATTLE INSTALLATION** STANDARD DETAILS	
			CITY OF JENKS, OKLAHOMA	
			ENGINEERING DEPARTMENT	
			DATE: 09/12	STANDARD NO. EC-01

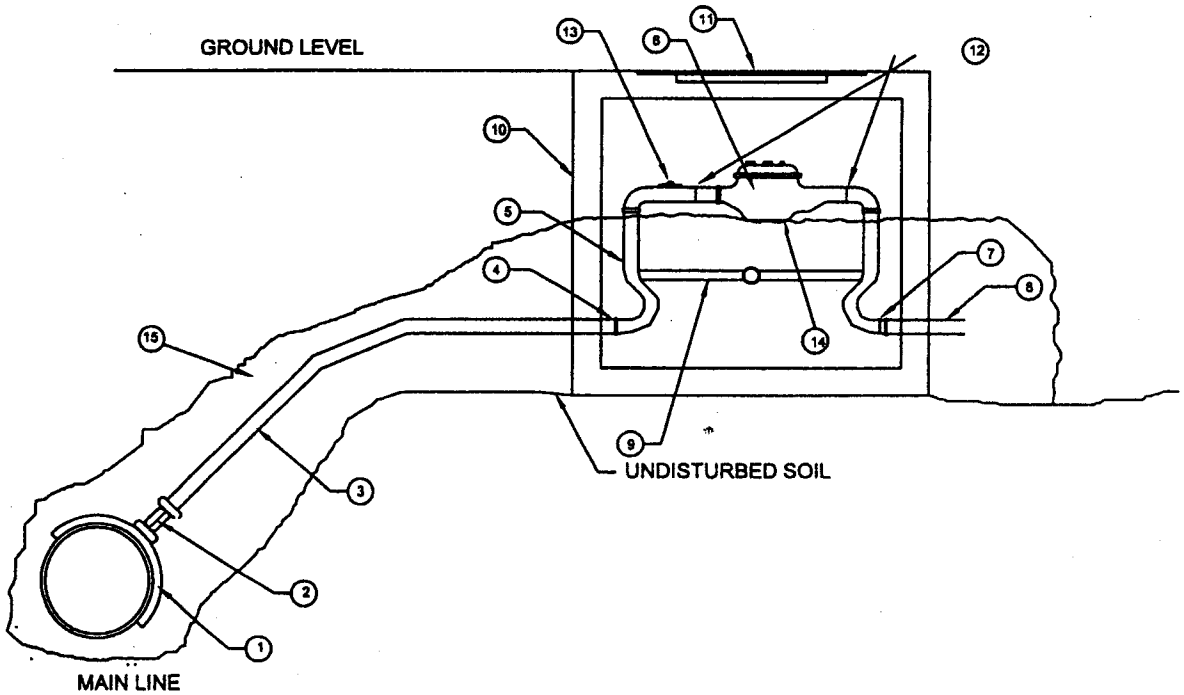

¾ -inch tap material list

1. Tapping saddle (Ford or Smith Blair with "iron pipe" thread)
2. Corporation stop (Ford model # F-1100-3) I.P. thread by CTS compression fitting
3. Polyethylene pipe (250 psi)
4. CTS compression fitting with stiffener inserts
5. Meter setter (Ford brass/copper (CTS by female IP) w/ check valve (model # VBH-72-12W-41-33)
6. Meter (supplied and set by City of Jenks)
7. Female IP fitting
8. Customer service line (connected by contractor)
9. Stabilizer bar
10. Meter can, round (13" opening & 18" deep)(Brooks)
11. Meter can plastic lid (Brooks)
12. Meter nuts and rubber washers (to be connected by City of Jenks)
13. Meter shut off valve
14. Meter freeze plate
15. Clean river/fill sand

1-inch tap material list

1. Tapping saddle (Ford or Smith Blair with "iron pipe" thread)
2. Corporation stop (Ford model # F-1100-4) I.P. thread by CTS compression fitting
3. Polyethylene pipe (250 psi)
4. CTS compression fitting with stiffener inserts
5. Meter setter (AX McDonald brass/copper (CTS by female IP) w/ check valve (model # 4147-143-4)
6. Meter (supplied and set by City of Jenks)
7. Male IP fitting
8. Customer service line (to be connected by contractor)
9. Stabilizer bar
10. Meter can, rectangular (18" x 24" x 18" deep)(Brooks)
11. Meter can plastic lid (Brooks)
12. Meter nuts and rubber washers (to be connected by City of Jenks)
13. Meter shut off valve
14. Meter Freeze plate
15. Clean river/fill sand

REVISION	BY	DATE	3/4" and 1" METER SETTING	
			STANDARD DETAILS	
			CITY OF JENKS, OKLAHOMA	
			PUBLIC WORKS DEPARTMENT CITY ENGINEER	
			DATE: 10/05	STANDARD NO. METER - 01

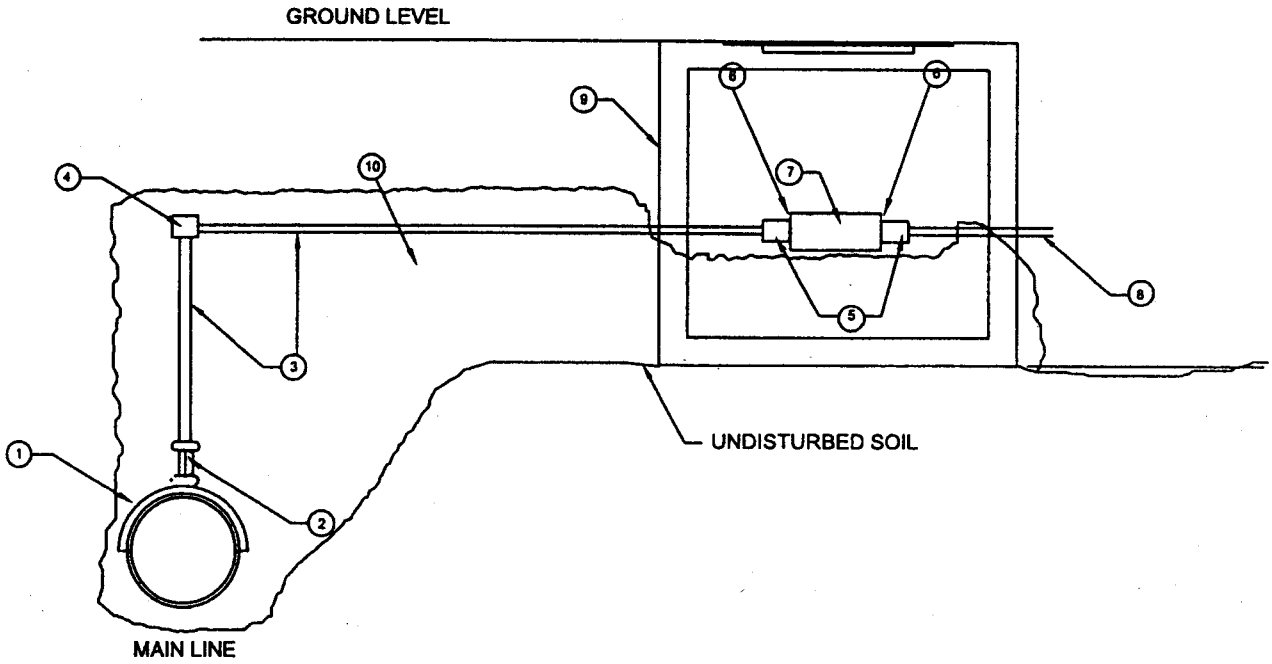

2-inch tap material list

1. Tapping saddle (Ford or Smith Blair with "iron pipe" thread)
2. Corporation stop (Ford model # FB-500-7) IP by IP threads
3. 2" iron pipe, galvanized (length to be determined on site)
4. 2" galvanized iron 90 degree elbow
5. 2" ball valve shut-off (Ford ¼ turn with male IP by flange fittings with stainless steel bolts)
6. Rubber gasket between ball valve and meter
7. 2" meter (to be supplied by City of Jenks) installed by contractor
8. 2" galvanized iron pipe, 6 inches long to attach to customer service line by contractor
9. Meter box with observation access in lid (24" x 36" x 24" deep)(Brooks)
10. Clean river/fill sand

REVISION	BY	DATE	2" METER SETTING
			STANDARD DETAILS
			CITY OF JENKS, OKLAHOMA
			PUBLIC WORKS DEPARTMENT CITY ENGINEER
			DATE: 10/05 — STANDARD NO. METER - 02

SANITARY SEWER PIPE BEDDING

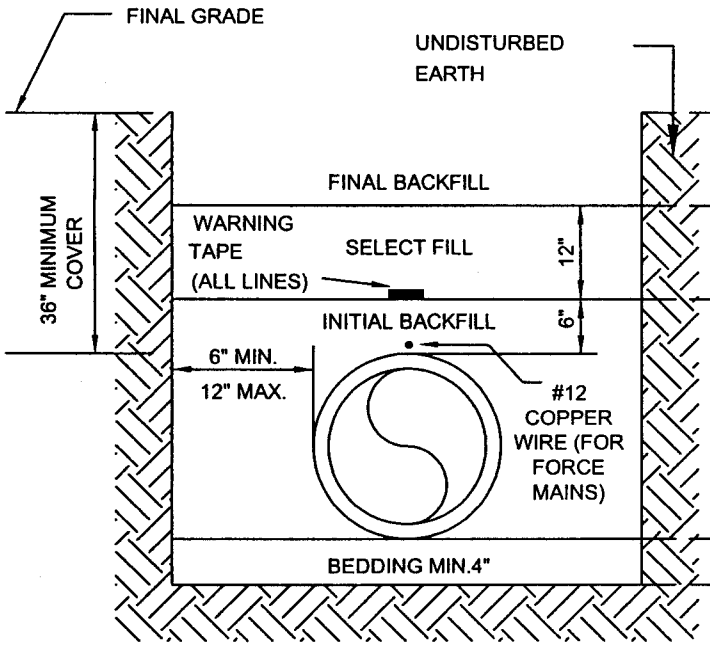

NON-PAVED AREAS	PAVED AREAS
EXCAVATED MATERIAL	CRUSHED ROCK
SAND	SAND
SAND	SAND
SAND	SAND

NOTES:
1. SELECT FILL CONSISTS OF EXCAVATED MATERIALS CONTAINING NO ROCKS LARGER THAN 2 INCHES.
2. CRUSHED ROCK SHALL BE ODOT TYPE "A" BASE
3. COMPACTION REQUIREMENTS:
   a. NON- PAVED AREAS: 90% MAXIMUM STANDARD PROCTOR DENSITY FOR COHESIONLESS SOILS AND 85% FOR COHESIVE SOILS.
   b. PAVED AREAS: 95% MAXIMUM STANDARD PROCTOR DENSITY FOR COHESIONLESS SOILS.
4. FILLS OVER 12 FEET DEEP - MATERIAL IN THE AREA FROM SELECT FILL TO BEDDING SHALL BE 3/4" CRUSHER RUN WELL GRADED..
5. FLOWABLE FILL MAY BE SUBSTITUTED FOR SELECT FILL IN ROAD CROSSING.
6. IN AREAS WHERE WATER INFILTRATION CANNOT BE CONTROLLED BEDDING AND INITIAL BACKFILL SHALL BE MATERIAL CONFORMING TO ODOT SECTION 703.04(A).

REVISION	BY	DATE

PIPE INSTALLATION
STANDARD DETAILS

CITY OF JENKS, OKLAHOMA
PUBLIC WORKS DEPARTMENT

DATE: 02/08 | STANDARD NO. SAN-O1

G:\STANDARD DETAILS\Sewer\SAN-01.dwg

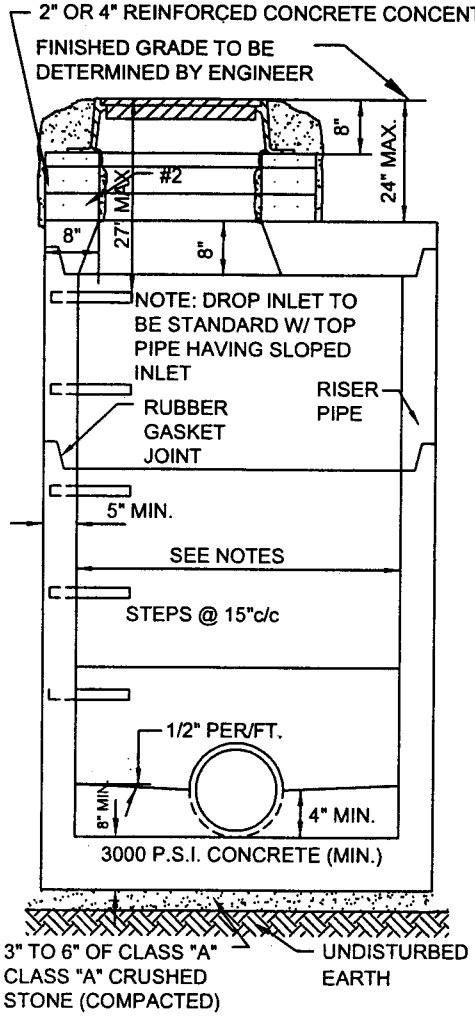

PRECAST MANHOLE
FLAT TOP

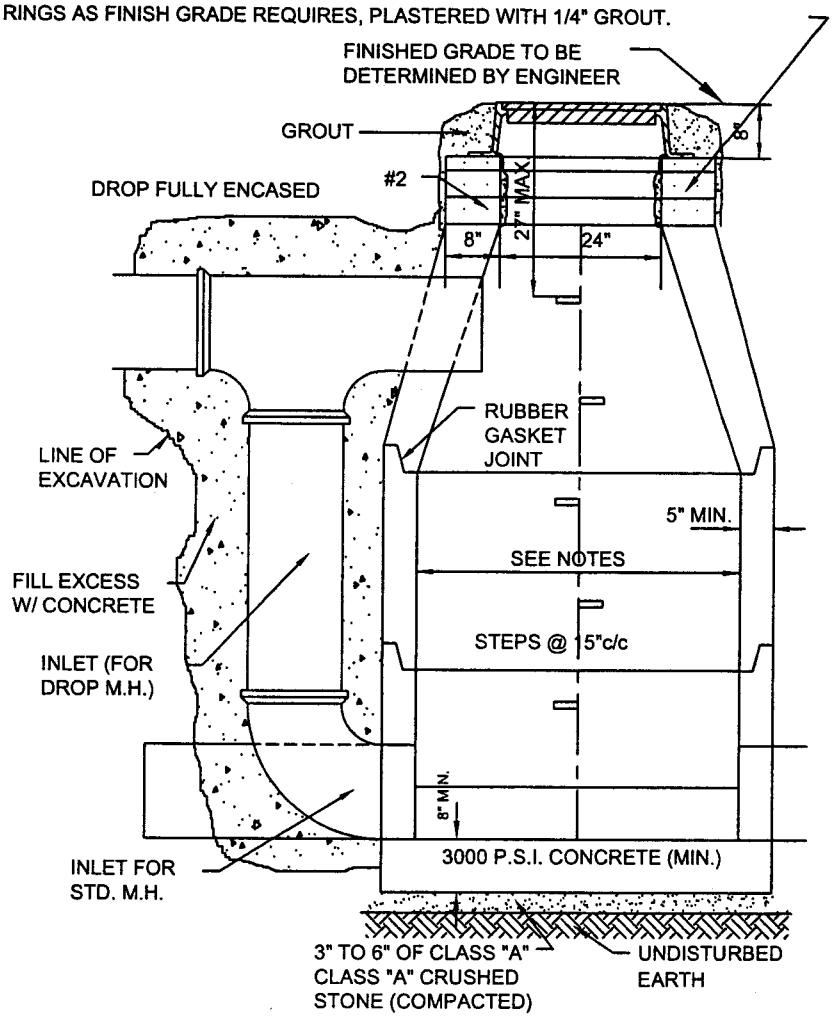

PRECAST MANHOLE
TAPERED TOP

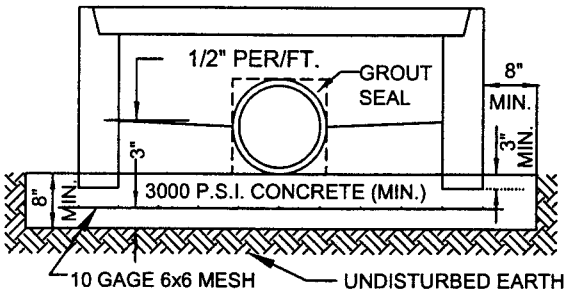

CAST-IN-PLACE BASE

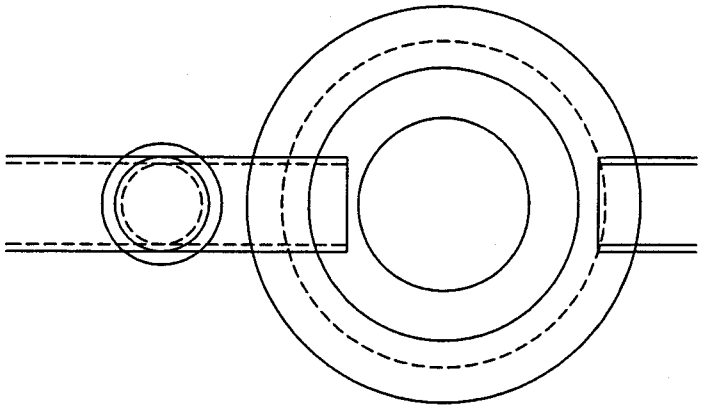

STANDARD & DROP MANHOLE

NOTES:

1. SHALL CONFORM TO CURRENT ASTM C478.
2. 8" TO 15" PIPE, 4' ID MANHOLE REQUIRED.
3. 18" TO 27" PIPE, 5' ID MANHOLE REQUIRED
4. OVER 27" PIPE MANHOLE ID AS SPECIFIED BY ENGINEER
5. MANHOLES LESS THAN 4'-6" IN HEIGHT SHALL HAVE A FULL 4'-0" ID OR LARGER FROM TOP TO BOTTOM
6. WHEN CAST-IN-PLACE BASE IS USED, THE PRECAST BOTTOM SECTION SHALL BE EMBEDDED A MINIMUM OF 3" INTO THE BASE

REVISION	BY	DATE

PRECAST MANHOLE/ DROP MANHOLE
STANDARD DETAILS

CITY OF JENKS, OKLAHOMA
PUBLIC WORKS DEPARTMENT

DATE: 02/08 | STANDARD NO. SAN-02

CAD:\STANDARD DETAILS\SEWER REVISED PER PHIL\SAN-03

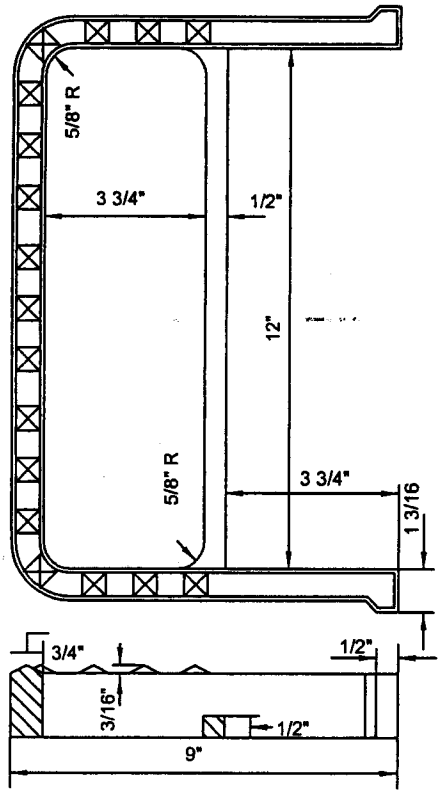

LARGE STEP

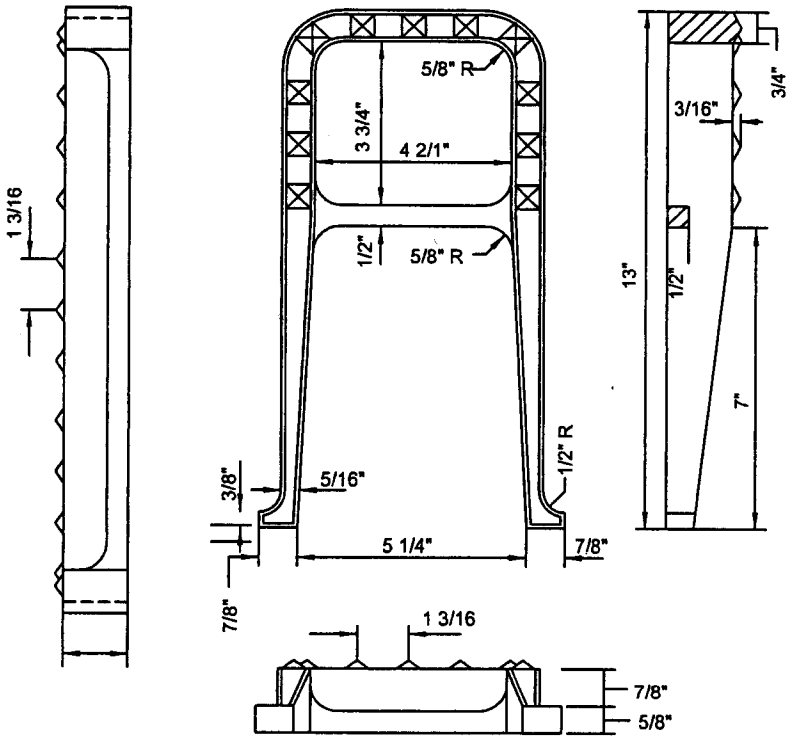

STANDARD STEP

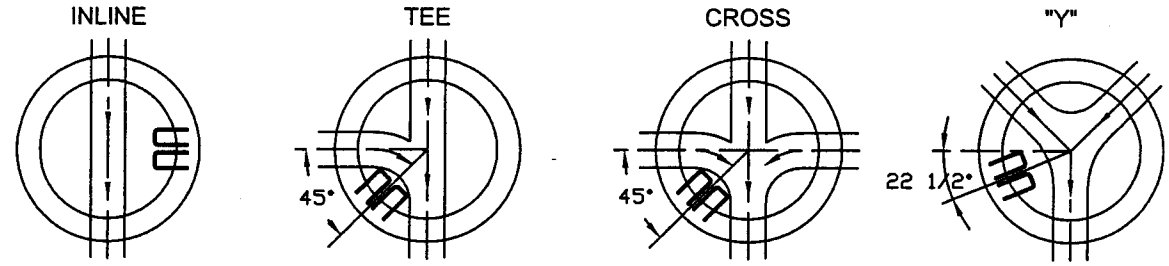

LOCATION OF MANHOLE STEPS

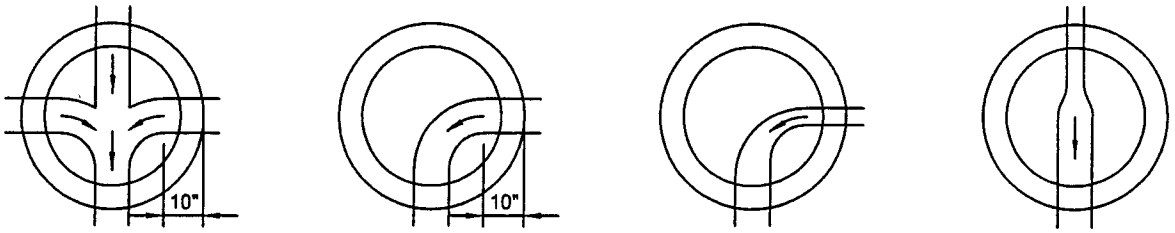

TYPICAL MANHOLE INVERT DETAIL

MANHOLE INVERT MINIMUM DROPS

1/10' MINIMUM DROP ACROSS MANHOLE FOR INLINE MANHOLE INVERTS

2/10' MINIMUM DROP FROM INLET TO OUTLET IF 90° OR LESS APART

MAINTAIN FLOW LINE THROUGH MANHOLES AS CLOSE AS POSSIBLE.

REVISION	BY	DATE

MANHOLE STEPS & INVERT DETAILS

STANDARD DETAILS

CITY OF JENKS, OKLAHOMA

PUBLIC WORKS DEPARTMENT

ENGINEERING DIVISION

DATE: 02/08

STANDARD NO. SAN-03

CAD:\STANDARD DETAILS\SEWER REVISED PER PHIL\SAN-05

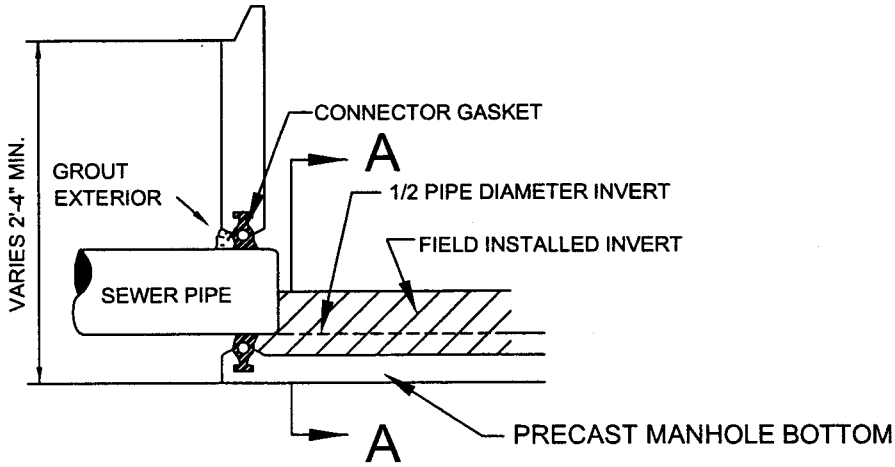

TYPE A MANHOLE

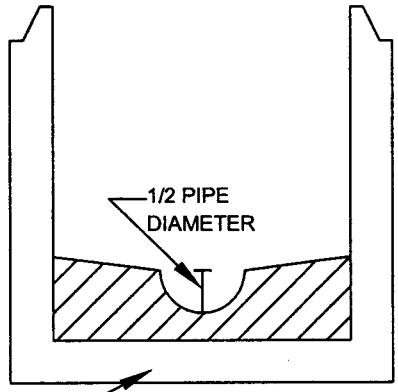

SECTION A-A

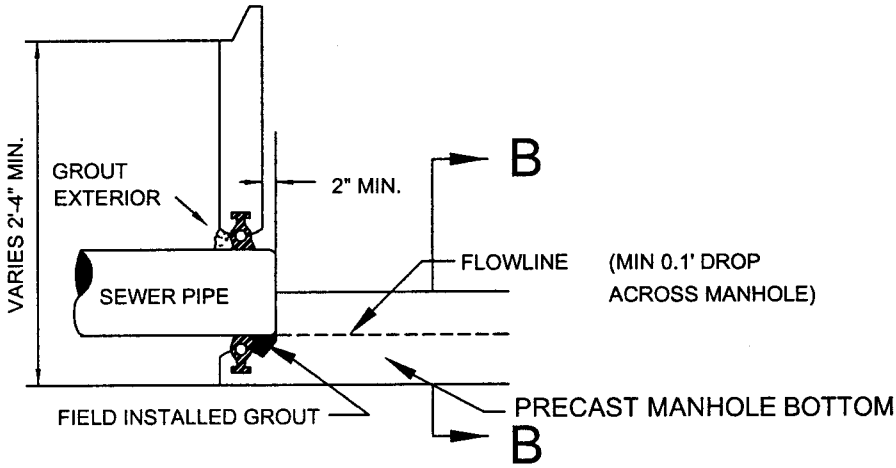

TYPE B MANHOLE

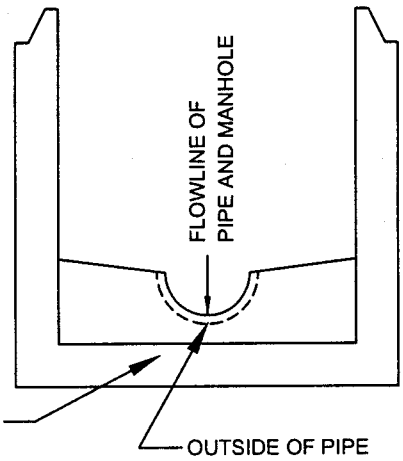

SECTION B-B

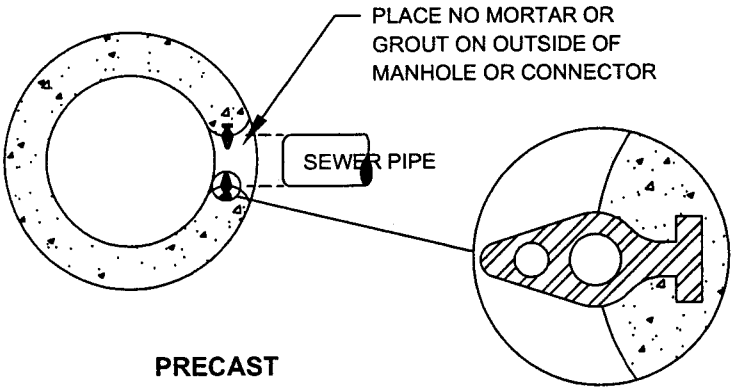

PRECAST

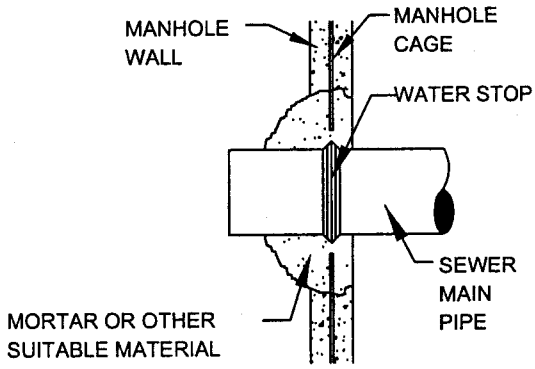

INSTALLED IN FIELD

REVISION	BY	DATE

SANITARY SEWER MANHOLE PIPE CONNECTOR
STANDARD DETAILS

CITY OF JENKS, OKLAHOMA

PUBLIC WORKS DEPARTMENT

DATE: 02/08 | STANDARD NO. SAN-04

CAD\STANDARD DETAILS\SEWER REVISED PER PHIL\SAN-07

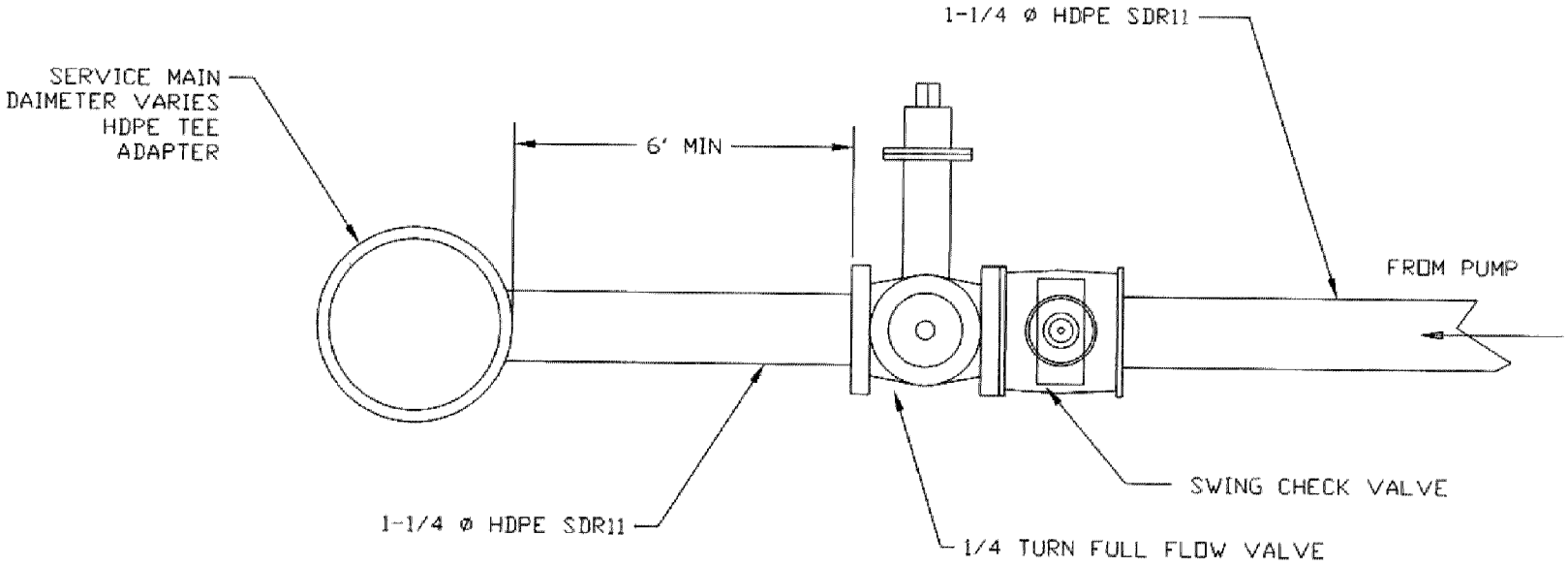

NOTES

1. VALVE BOX AND COVER NOT SHOWN BUT REQUIRED
   MATERIAL OF VALVE BOX OPTIONAL (HDPE, CAST IRON, CONCRETE)
   OWNER APPROVAL REQUIRED

2. CHECK VALVE AND SHUT-OFF VALVE TO BE LOCATED
   ON PROPERTY SIDE OF EASEMENT LINE

3. THESE VALVES IN ADDITION TO VAVLES ON PUMP STATION

4. VALVES MAY BE SINGLE UNIT.

5. VALVE CONNECTION OPTIONAL,(FLANGE OR MJ)
   USE ADAPTERS AS REQUIRED.

REVISION	BY	DATE	PRIVATE SEWER GRINDER PUMP CONNECTION TO FORCE MAIN STANDARD DETAILS	
			CITY OF JENKS, OKLAHOMA	
			ENGINEERING DEPARTMENT	
			DATE: 08/15	STANDARD NO. SAN-05

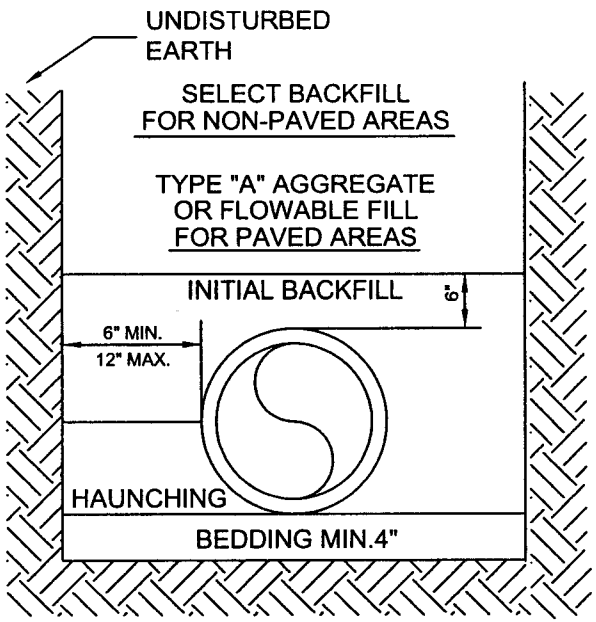

PIPE BEDDING

NON-PAVED AREAS	PAVED AREAS
EXCAVATED MATERIAL	CRUSHED ROCK
SAND	SAND
SAND	SAND
SAND	SAND

NOTES:
1. SELECT FILL CONSISTS OF EXCAVATED MATERIALS CONTAINING NO ROCKS LARGER THAN 2 INCHES.
2. CRUSHED ROCK SHALL BE ODOT TYPE "A" BASE AGGREGATE
3. COMPACTION REQUIREMENTS:
   a. NON- PAVED AREAS: 90% MAXIMUM STANDARD PROCTOR DENSITY FOR COHESIONLESS SOILS AND 85% FOR COHESIVE SOILS.
   b. PAVED AREAS: 95% MAXIMUM STANDARD PROCTOR DENSITY FOR COHESIONLESS SOILS.
4. FILLS OVER 10 FEET DEEP - INITIAL BACKFILL SHALL BE ODOT TYPE "A" BASE AGG.
5. FLOWABLE FILL MAY BE SUBSTITUTED FOR TYPE "A" AGGREGATE IN ROAD CROSSING.
6. IN AREAS WERE WATER INFILTRATION CANNOT BE CONTROLED, BEDDING AND INITIAL BACKFILL SHALL BE MATERIAL CONFORMING TO ODOT SECTION 703.04(A).

REVISION	BY	DATE

STORM SEWER PIPE INSTALLATION
STANDARD DETAILS

CITY OF JENKS, OKLAHOMA

ENGINEERING DEPARTMENT

DATE: 02/05 STANDARD NO. STRM-01

CAD:\STANDARD DETAILS\STORM\STRM-01

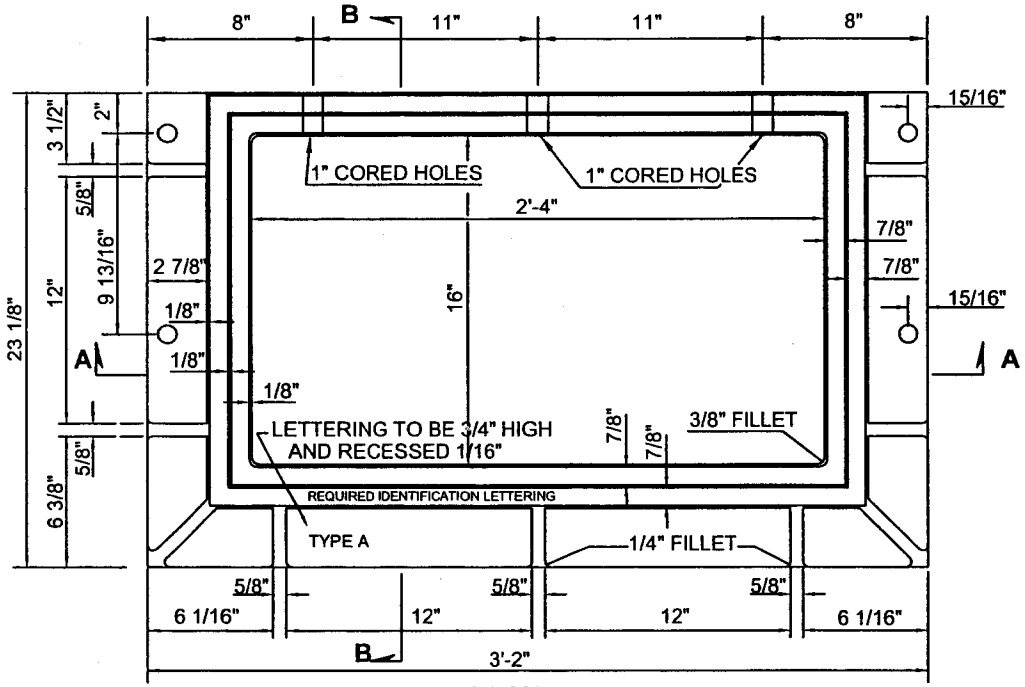

PLAN

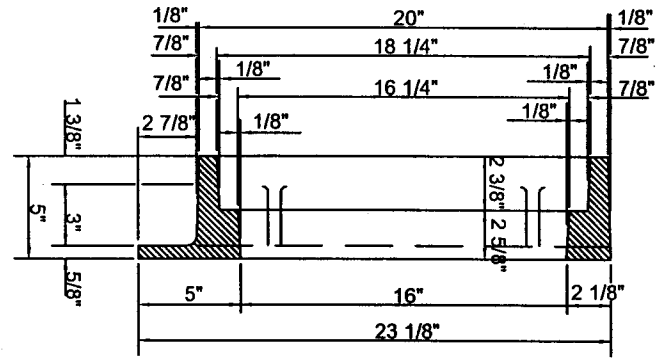

SECTION B-B

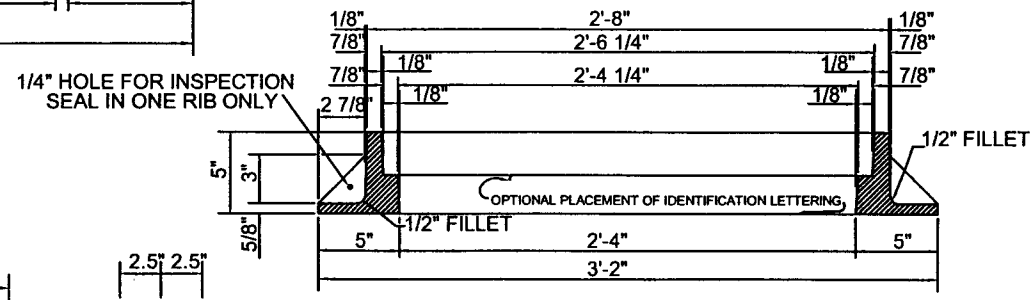

SECTION A-A

STORM SEWER INLET FRAME

NEENAH R-3076 OR AN APPROVED EQUAL

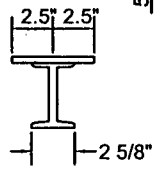

SECTION A-A

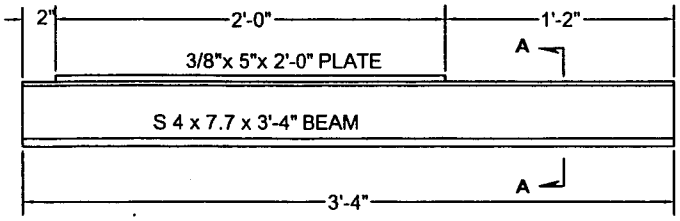

ELEVATION

SUPPORT BEAM

PLATE TO BE USED WHEN
STRUCTURE IS BUILT ON
CURVED CURB

REVISION	BY	DATE

STORM SEWER INLET FRAME TYPE A

STANDARD DETAILS

CITY OF JENKS, OKLAHOMA

ENGINEERING DEPARTMENT

DATE: 02/05 | STANDARD NO. STRM-02

CAD:\STANDARD DETAILS\STORM\STRM-02

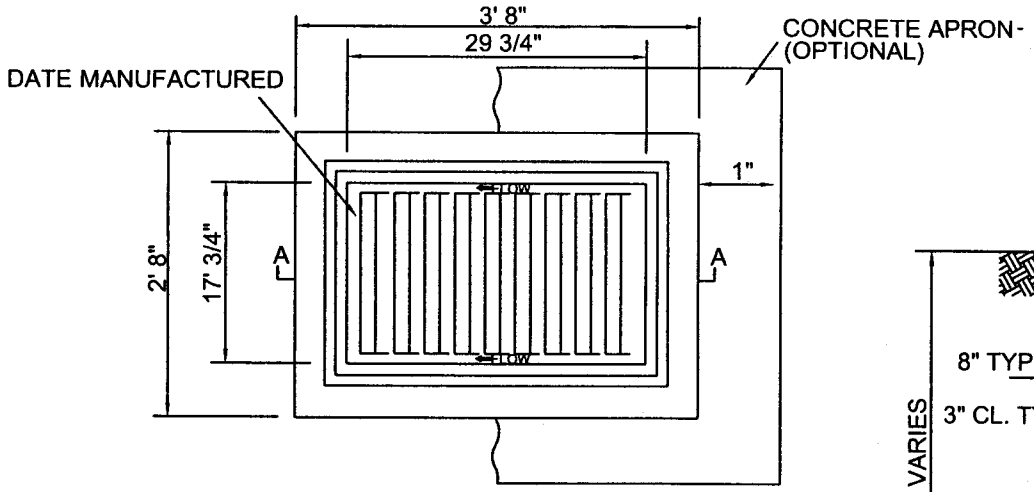

PLAN

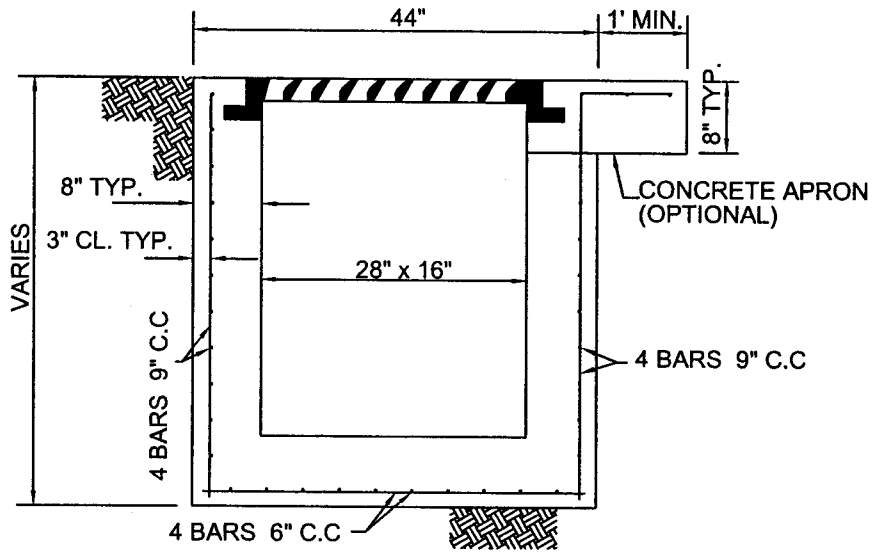

SECTION A-A

NOTES:

1. ALL CONSTRUCTION METHODS & MATERIAL REQUIREMENTS SHALL BE IN ACCORDANCE WITH THE CURRENT SPECIFICATIONS.
2. SHARP EDGES RESULTING FROM FABRICATION SHALL BE DULLED BY ANY ACCEPTABLE METHOD FOR SAFETY IN HANDLING.
3. GRATES SHALL BE INSTALLED IN FRAME WITH FLOW ARROW POINTING DOWNSTREAM OR TOWARD THE LOW POINT IN A SUMP.
4. VANE GRATE SHALL BE ODOT TYPE VG-F, STANDARD DRAWING CIG-1-2.
5. FRAME SHALL BE ODOT TYPE A FOR INLET DESIGN 1, STANDARD DRAWING SSIF-2-4.
6. CASTINGS SHALL BE SMOOTH AND WELL CLEANED BY SHOT BLASTING OR OTHER APPROVED CLEANING.
7. ALL CASTINGS SHALL BE MANUFACTURED TRUE TO PATTERN: COMPONENT PARTS SHALL FIT TOGETHER IN A SATISFACTORY MANNER.
8. ALL LETTERING SHALL BE RECESSED 1/16".

REVISION	BY	DATE

AREA INLET

STANDARD DETAILS

CITY OF JENKS, OKLAHOMA

ENGINEERING DEPARTMENT

DATE: 02/05 STANDARD NO. STRM-03

CAD:\STANDARD DETAILS\STORM\STRM-03

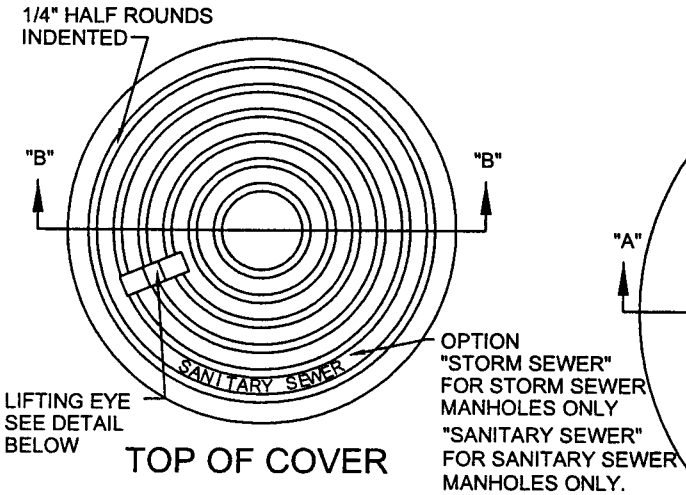

TOP OF COVER

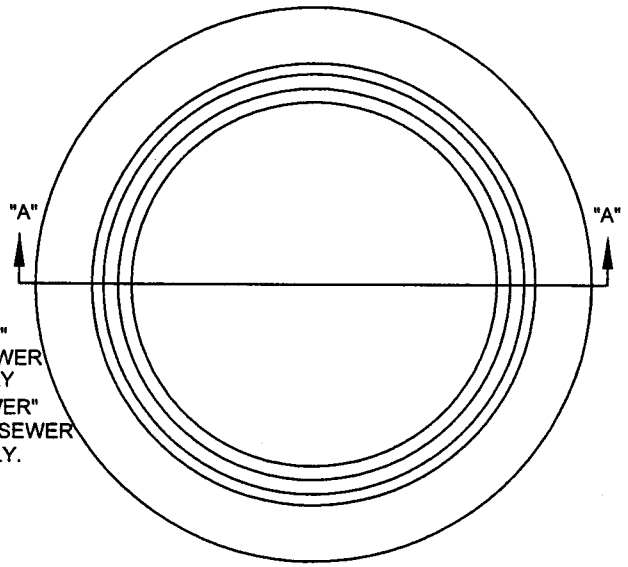

PLAN

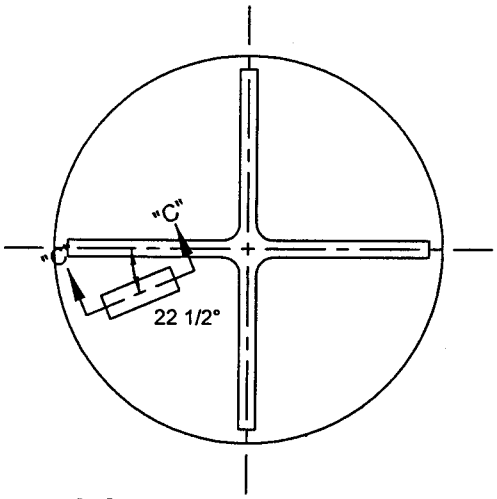

BOTTOM OF COVER

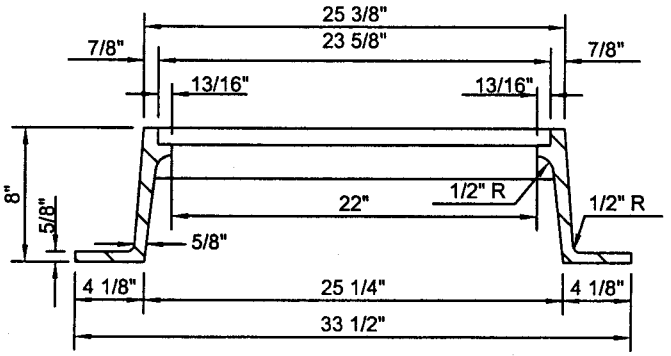

SECTION "A"-"A"

MANHOLE FRAME

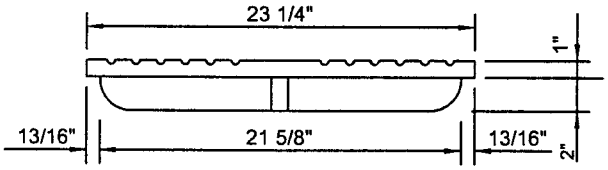

SECTION "B"-"B"

MANHOLE COVER

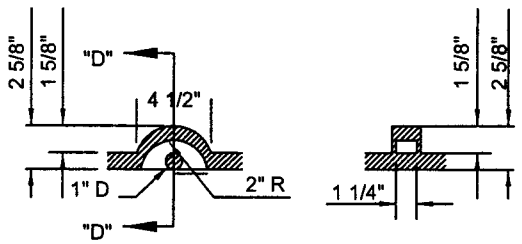

SECTION "C"-"C" SEDTION "D"-"D"

LIFTING EYE DETAIL

REVISION	BY	DATE

MANHOLE FRAME AND COVER
STANDARD DETAILS

CITY OF JENKS, OKLAHOMA

ENGINEERING DEPARTMENT

DATE: 02/05 STANDARD NO. STRM-04

CAD:\STANDARD DETAILS\STORM\STRM-04

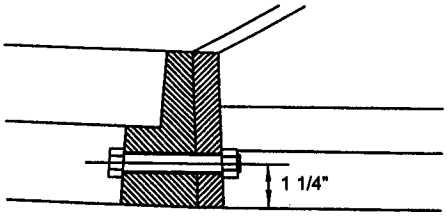

DETAIL OF CONNECTION
FRAME AND CAST IRON CURB

NOTE: FRAME TO BE BOLTED TO THE CURB WITH 3 EACH 3/4" x 4 1/2" MACHINE BOLTS

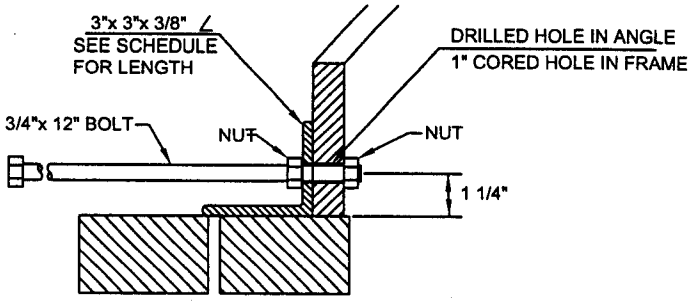

DETAIL OF CONNECTION
ANGLE IRON & CAST IRON CURB

NOTE: ANGLE IRON TO BE BOLTED TO CURB WITH 3 - 3/4"x 12" MACHINE BOLTS IN EACH CURB SECTION

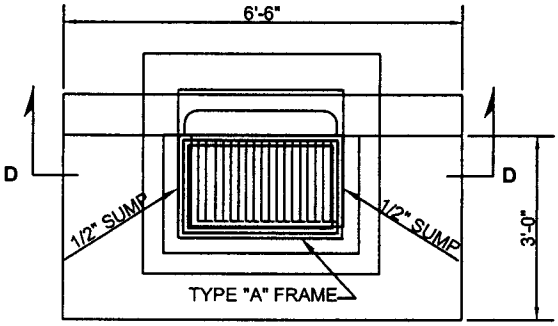

PLAN

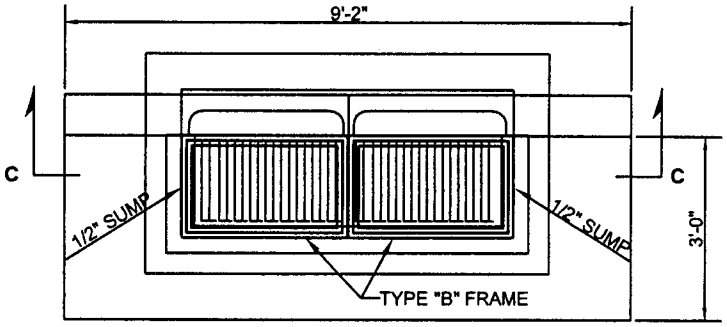

PLAN

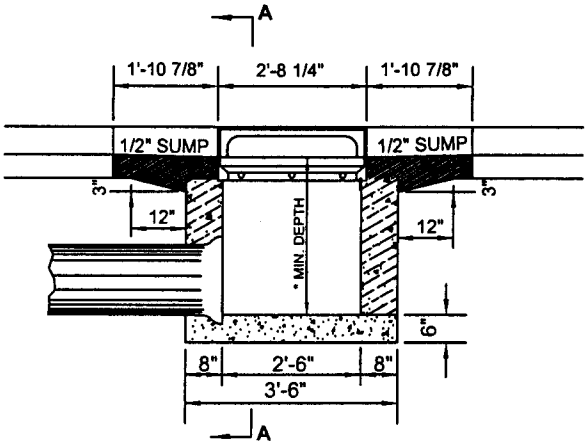

SECTION D-D
SINGLE GRATE CURB INLET

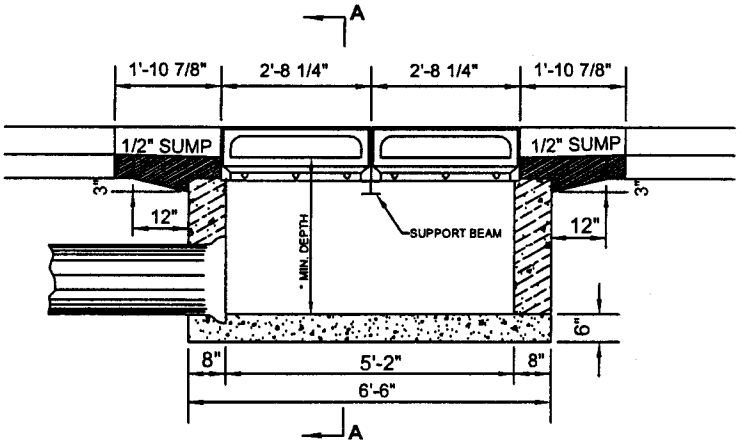

SECTION C-C
DOUBLE GRATE CURB INLET

*** MINIMUM DEPTH FOR INLETS**
(FOR DETAILING)

2'-4" FOR 15" RCP
2'-8" FOR 18" RCP
3'-2" FOR 24" RCP
3'-8" FOR 30" RCP
4'-2" FOR 36" RCP

REVISION	BY	DATE

CURB INLET (SHEET 1)
STANDARD DETAILS

CITY OF JENKS, OKLAHOMA
PUBLIC WORKS DEPARTMENT

DATE: 02/08 | STANDARD NO. STRM-05

CAD:\STANDARD DETAILS\STORM\STRM-07

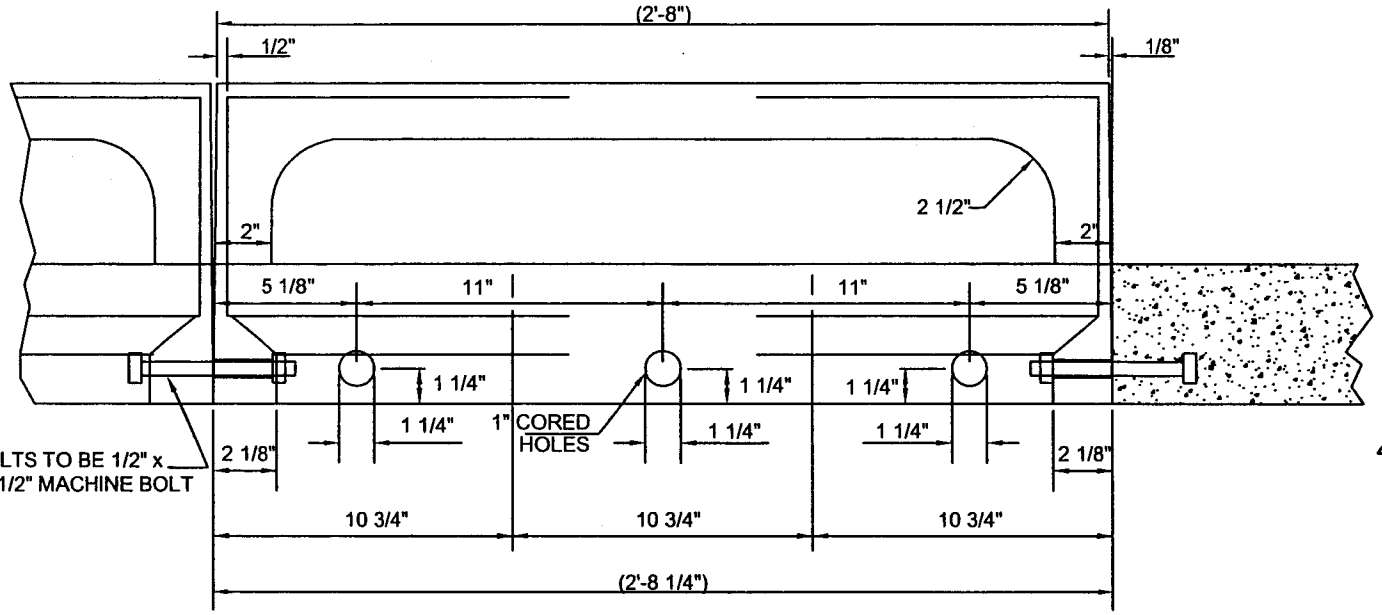

CAST IRON STORM SEWER CURB HOOD

NEENAH R-3076-6BOK
OR AN APPROVED EQUAL

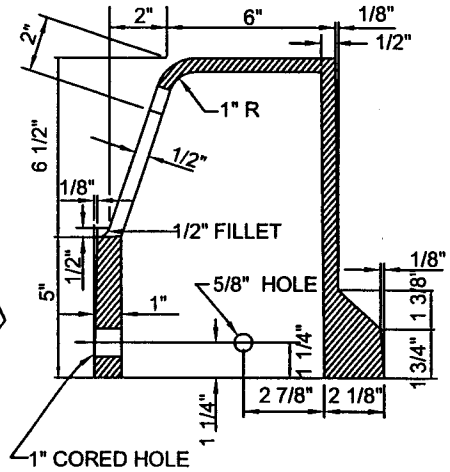

6" BARRIER CURB HOOD

NEENAH R-3076-6BOK
OR AN APPROVED EQUAL

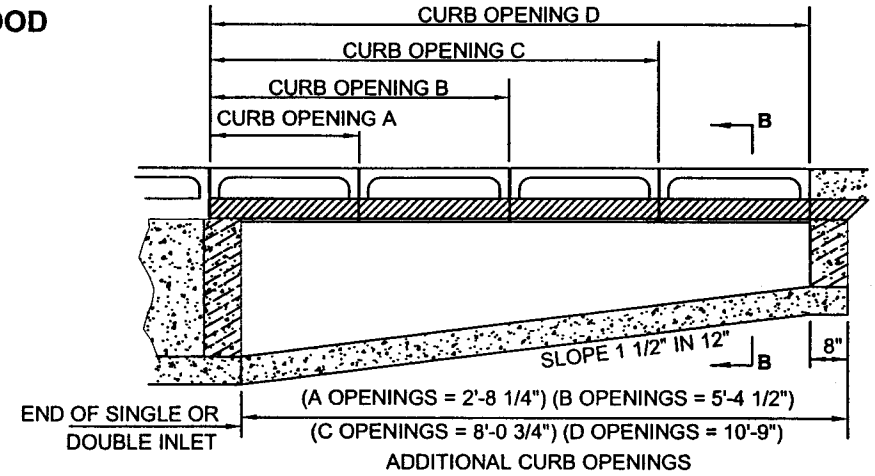

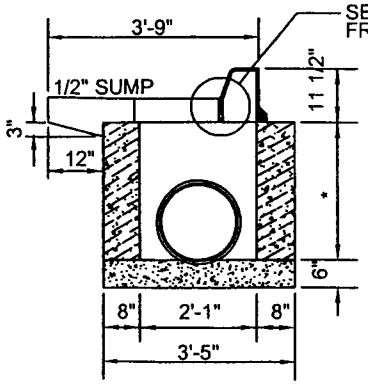

SECTION A-A

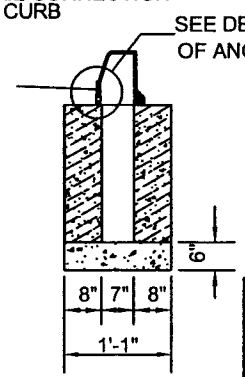

SECTION B-B

* INLET DIMENSION

*** MINIMUM DEPTH FOR PRECAST WALLS**

1'-11" FOR 15" RCP
2'-3" FOR 18" RCP
2'-9" FOR 24" RCP
3'-3" FOR 30" RCP
3'-9" FOR 36" RCP

REVISION	BY	DATE

CURB INLET (SHEET 2)
STANDARD DETAILS

CITY OF JENKS, OKLAHOMA
PUBLIC WORKS DEPARTMENT

DATE: 02/08 | STANDARD NO. STRM-06

CAD:\STANDARD DETAILS\STORM\STRM-08

DIRECTION OF STREET STATIONING

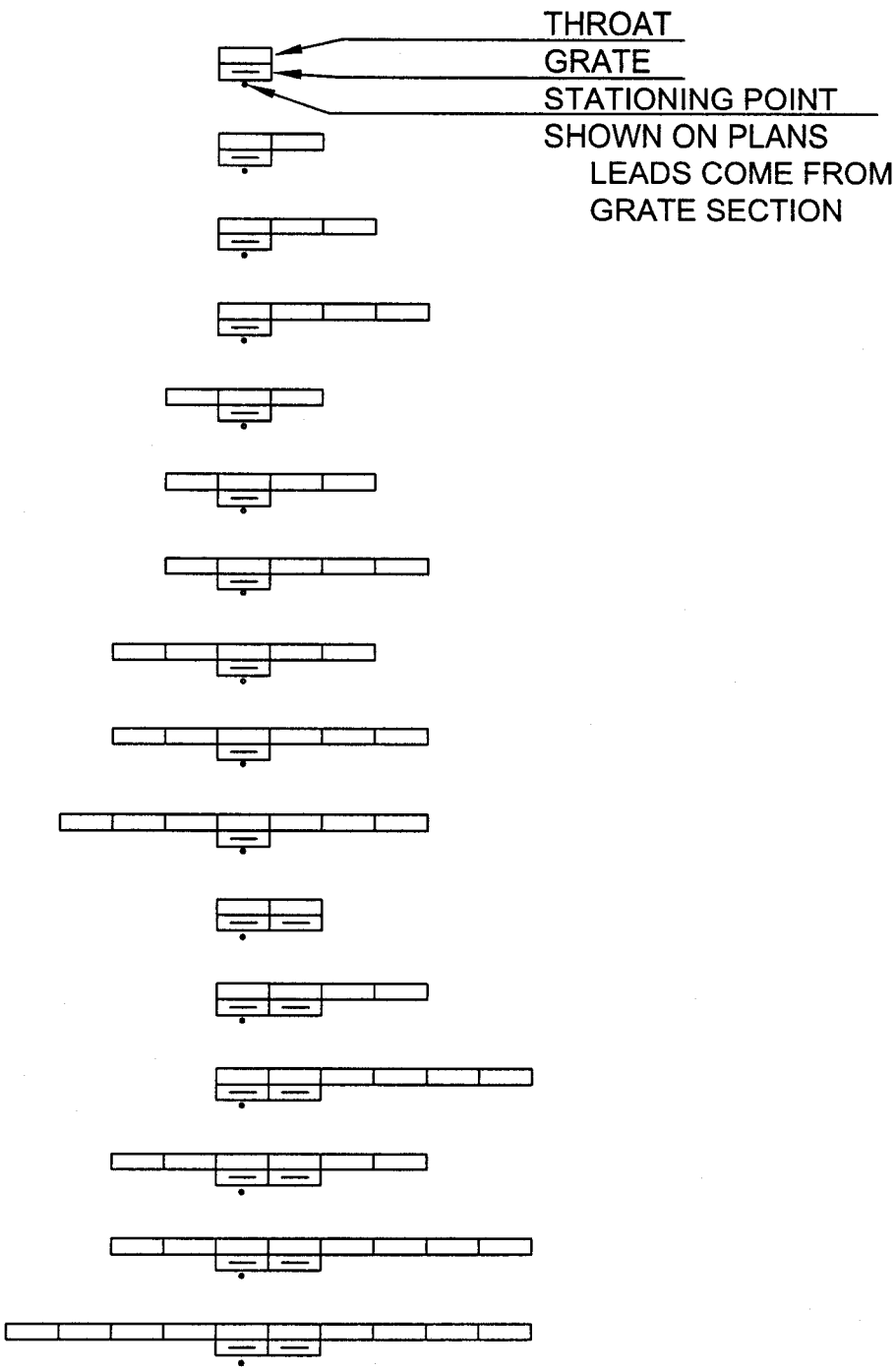

REVISION	BY	DATE

CONFIGURATION OF CAST IRON CURB INLETS
STANDARD DETAILS

CITY OF JENKS, OKLAHOMA
PUBLIC WORKS DEPARTMENT

DATE: 02/08 STANDARD NO. STRM-07

CAD:\STANDARD DETAILS\STORM\STRM-03

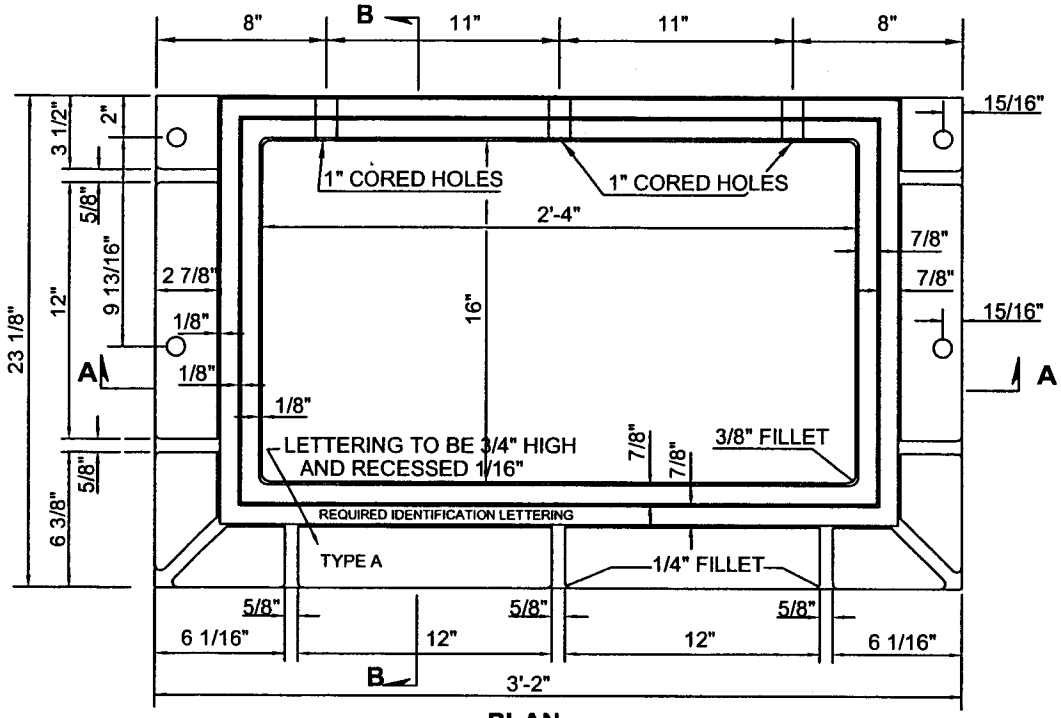

PLAN

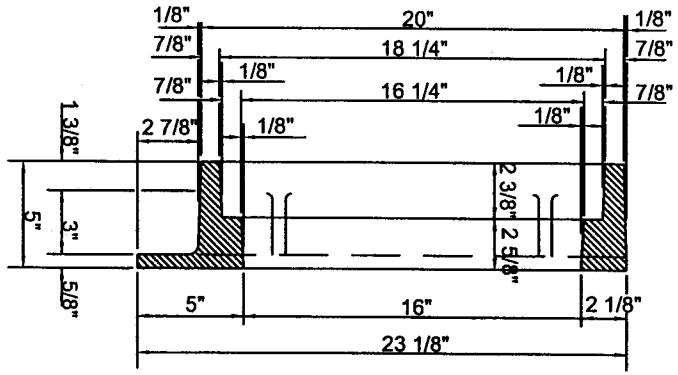

SECTION B-B

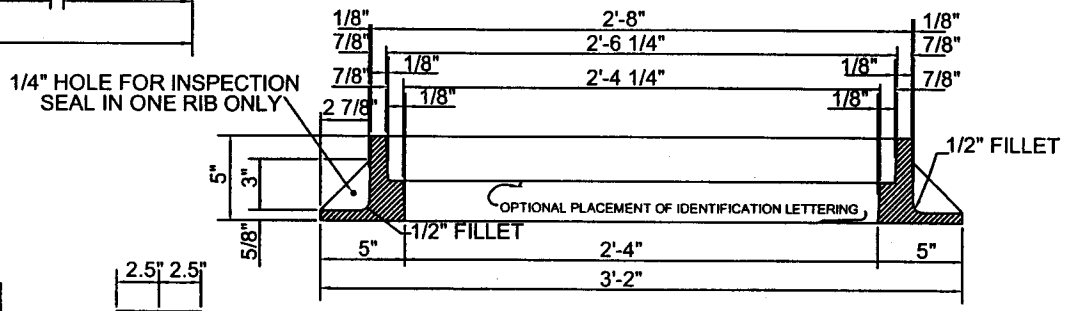

SECTION A-A

STORM SEWER INLET FRAME

NEENAH R-3076 OR AN APPROVED EQUAL

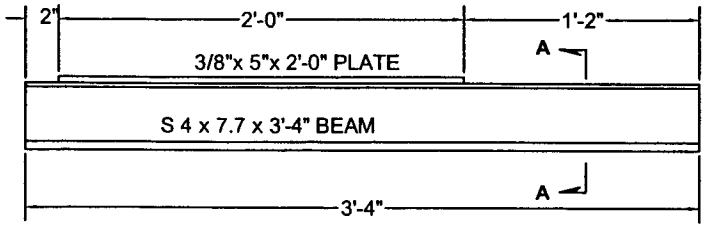

ELEVATION

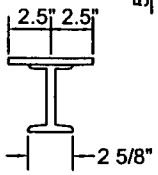

SECTION A-A

SUPPORT BEAM

PLATE TO BE USED WHEN
STRUCTURE IS BUILT ON
CURVED CURB

REVISION	BY	DATE

STORM SEWER INLET FRAME TYPE A

STANDARD DETAILS

CITY OF JENKS, OKLAHOMA

PUBLIC WORKS DEPARTMENT

DATE: 02/08 STANDARD NO. STRM-08

CAD:\STANDARD DETAILS\STORM\STRM-04

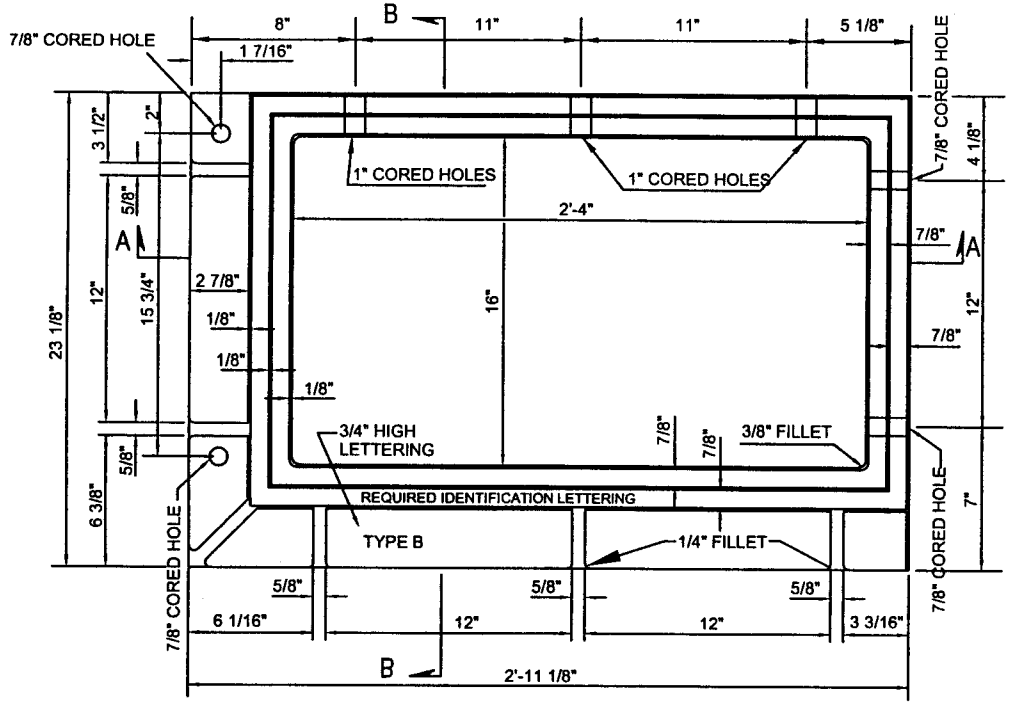

PLAN

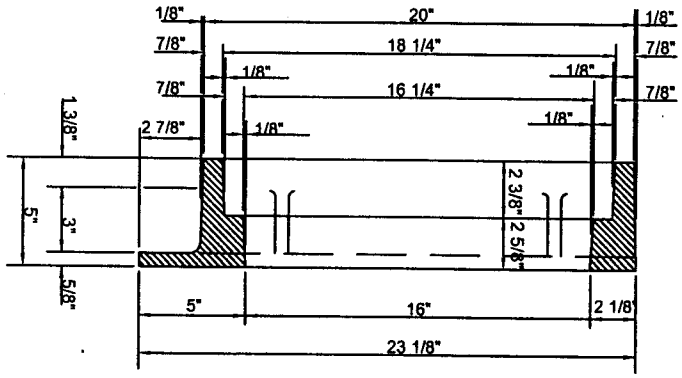

SECTION B-B

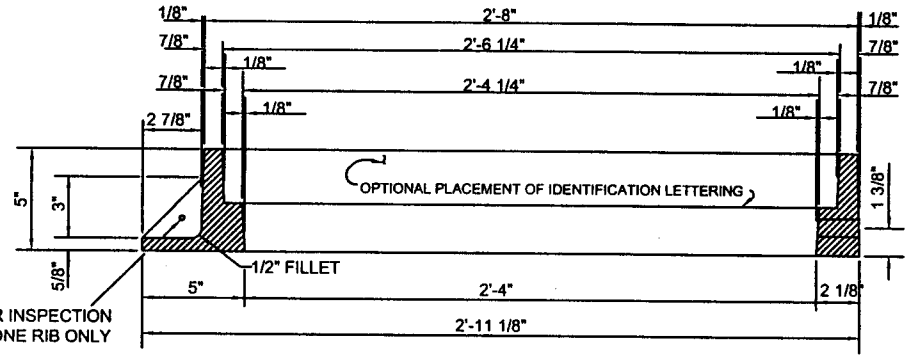

SECTION A-A

STORM SEWER INLET FRAME

NEENAH R-3077 OR AN APPROVED EQUAL

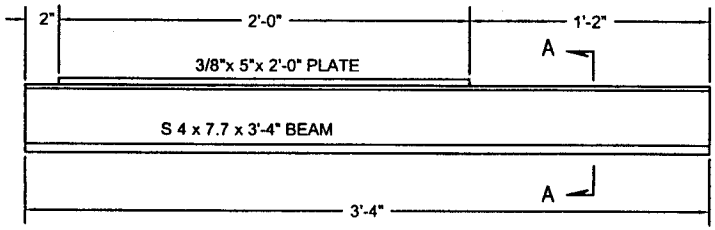

ELEVATION

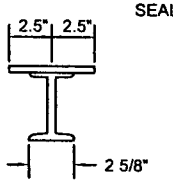

SECTION A-A

SUPPORT BEAM

PLATE TO BE USED WHEN STRUCTURE IS BUILT ON CURVED CURB

NOTE: MAKE ONE FRAME AS SHOWN AND ONE REVERSED FOR INLETS GREATER THAN ONE FRAME WITH SUPPORT BEAM OR BEAMS IN BETWEEN.

REVISION	BY	DATE

STORM SEWER INLET FRAME TYPE B

STANDARD DETAILS

CITY OF JENKS, OKLAHOMA

PUBLIC WORKS DEPARTMENT

DATE: 02/08 STANDARD NO. STRM-09

CAD:\STANDARD DETAILS\STORM\STRM-05

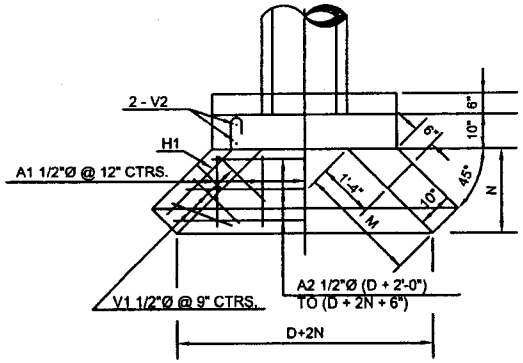

PLAN

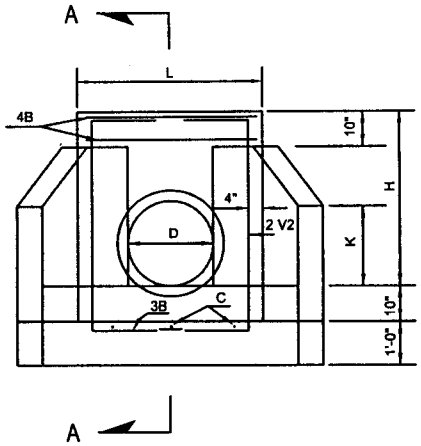

ELEVATION

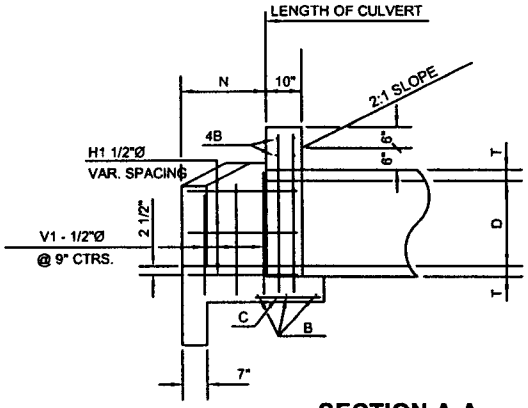

SECTION A-A

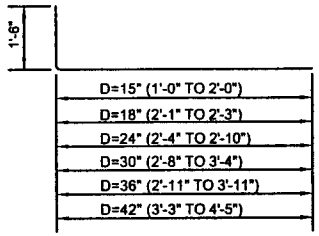

BENDING FOR V1 - BARS

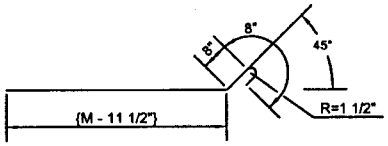

BENDING FOR H1 - BARS

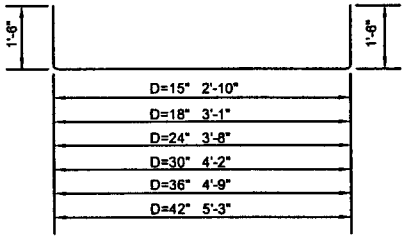

BENDING FOR V2 - BARS

DIMENSIONS & QUANTITIES FOR HEADWALLS WITH 45° WINGS

DIMENSIONS								REINFORCING STEEL														QUANTITIES *	
D	AREA SQ. FT.	T	H	K	L	M	N	A1 - 1/2"Ø		A2 - 1/2"Ø		B - 1/2"Ø		C - 1/2"Ø		H1 - 1/2"Ø		V1 - 1/2"Ø		V2 - 1/2"Ø		CLASS "A" CONC., C.Y.	REINF. STEEL, LBS.
								NO.	LGTH.	NO.	LGTH.	NO.	LGTH.	NO.	LGTH.	NO.	LGTH.	NO.	LGTH.	NO.	LGTH.		
15"	1.23	2 1/4"	2'-5 1/4"	1'-5"	3'-7"	1'-9"	1'-3"	4	1'-0"	2	3'-9" AV.	7	3'-3"	3	1'-6"	4	2'-1"	4	3'-5" AV.	4	5'-10"	0.74	57
18"	1.77	2 1/2"	2'-8 1/2"	1'-7"	3'-10"	2'-1 1/2"	1'-6"	4	1'-2"	2	4'-3" AV.	7	3'-6"	3	1'-6"	4	2'-6"	4	3'-8" AV.	4	6'-1"	0.91	61
24"	3.14	3"	3'-3"	1'-10 1/2"	4'-4"	2'-10"	2'-0"	5	1'-8"	3	5'-3" AV.	7	4'-0"	3	1'-6"	6	3'-2"	6	4'-1" AV.	4	6'-8"	1.31	85
30"	4.91	3 1/2"	3'-9 1/2"	2'-2"	4'-10"	3'-6 1/2"	2'-6"	5	2'-2"	3	6'-3" AV.	7	4'-6"	4	1'-6"	6	3'-11"	8	4'-6" AV.	4	7'-2"	1.77	104
36"	7.07	4"	4'-4"	2'-5 1/2"	5'-4"	4'-3"	3'-0"	6	2'-8"	4	7'-3" AV.	7	5'-0"	4	1'-6"	6	4'-7"	10	4'-11" AV.	4	7'-9"	2.29	130
42"	9.62	4 1/2"	4'-10 1/2"	2'-9"	5'-10"	4'-11 1/2"	3'-6"	6	3'-2"	4	8'-3" AV.	7	5'-6"	4	1'-6"	6	5'-4"	12	5'-4" AV.	4	8'-3"	2.89	151

* FOR ONE HEADWALL

ALL EXPOSED CONCRETE EDGES SHALL HAVE A 3/4" CHAMFER

STANDARD CONCRETE HEADWALLS

FOR

15" TO 42" PIPE

REVISION	BY	DATE

HEADWALL (SHEET 1)

STANDARD DETAILS

CITY OF JENKS, OKLAHOMA

PUBLIC WORKS DEPARTMENT

DATE: 02/08

STANDARD NO. STRM-10

CAD:\STANDARD DETAILS\STORM\STRM-12

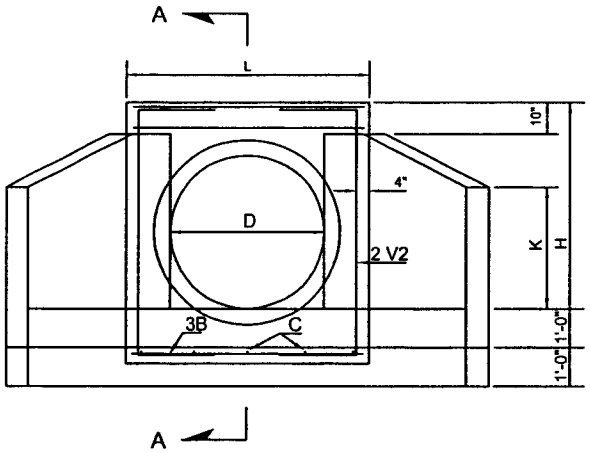

ELEVATION

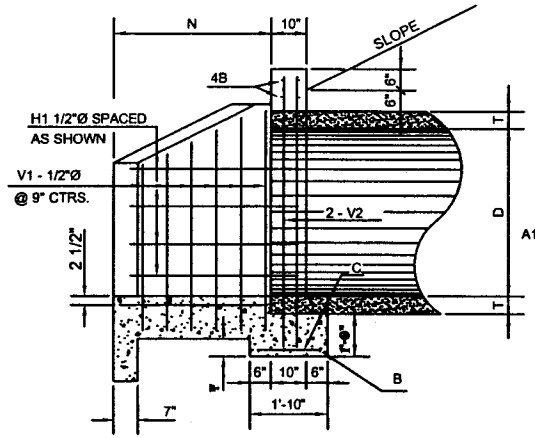

SECTION A-A

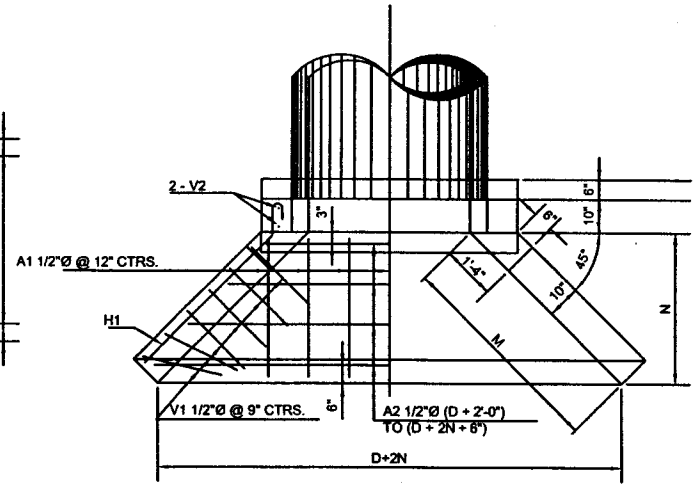

PLAN

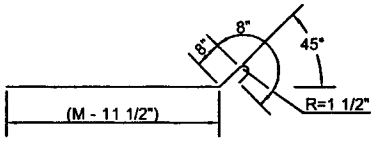

BENDING FOR H1 - BARS

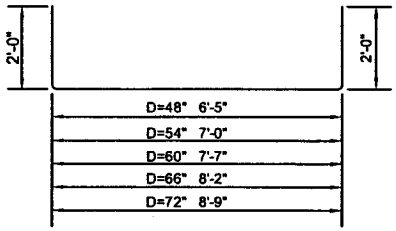

BENDING FOR V2 - BARS

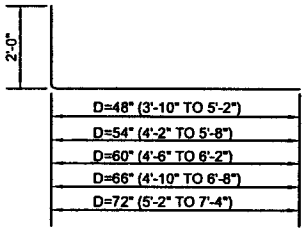

BENDING FOR V1 - BARS

DIMENSIONS & QUANTITIES FOR HEADWALLS WITH 45° WINGS																							
DIMENSIONS								REINFORCING STEEL														QUANTITIES *	
								A1 - 1/2"Ø		A2 - 1/2"Ø		B - 1/2"Ø		C - 1/2"Ø		H1 - 1/2"Ø		V1 - 1/2"Ø		V2 - 1/2"Ø			
D	AREA SQ. FT.	T	H	K	L	M	N	NO.	LGTH.	NO.	LGTH.	NO.	LGTH.	NO.	LGTH.	NO.	LGTH.	NO.	LGTH.	NO	LGTH.	CLASS "A" CONC., C.Y.	REINF. STEEL, LBS.
48"	12.57	5"	5'-5"	3'-2"	6'-4"	5'-3 1/2"	3'-9"	7	3'-5"	4	9'-0" AV.	7	6'-0"	5	1'-6"	8	5'-8"	12	6'-6" AV.	4	10'-5"	3.81	184
54"	15.90	5 1/2"	5'-11 1/2"	3'-6"	6'-10"	5'-10 1/2"	4'-2"	7	3'-10"	5	9'-11" AV.	7	6'-6"	5	1'-6"	8	6'-3"	14	6'-11" AV.	4	11'-0"	4.54	214
60"	19.63	6"	6'-6"	3'-10"	7'-4"	6'-5 1/2"	4'-7"	8	4'-3"	5	10'-10" AV.	7	7'-0"	6	1'-6"	10	6'-10"	16	7'-4" AV.	4	11'-7"	5.33	253
66"	23.76	6 1/2"	7'-0 1/2"	4'-2"	7'-10"	7'-1"	5'-0"	8	4'-8"	5	11'-9" AV.	7	7'-6"	6	1'-6"	10	7'-5"	18	7'-9" AV.	4	12'-2"	6.20	281
72"	28.27	7"	7'-7"	4'-6"	8'-4"	7'-9 1/2"	5'-6"	9	5'-2"	6	12'-9" AV.	7	8'-0"	6	1'-6"	10	8'-2"	20	8'-3" AV.	4	12'-9"	7.22	325

* FOR ONE HEADWALL

ALL EXPOSED CONCRETE EDGES SHALL HAVE A 3/4" CHAMFER

STANDARD CONCRETE HEADWALLS

FOR

48" TO 72" PIPE

REVISION	BY	DATE

HEADWALL (SHEET 2)

STANDARD DETAILS

CITY OF JENKS, OKLAHOMA

PUBLIC WORKS DEPARTMENT

DATE: 02/08

STANDARD NO. STRM-11

CAD:\STANDARD DETAILS\STORM\STRM-13

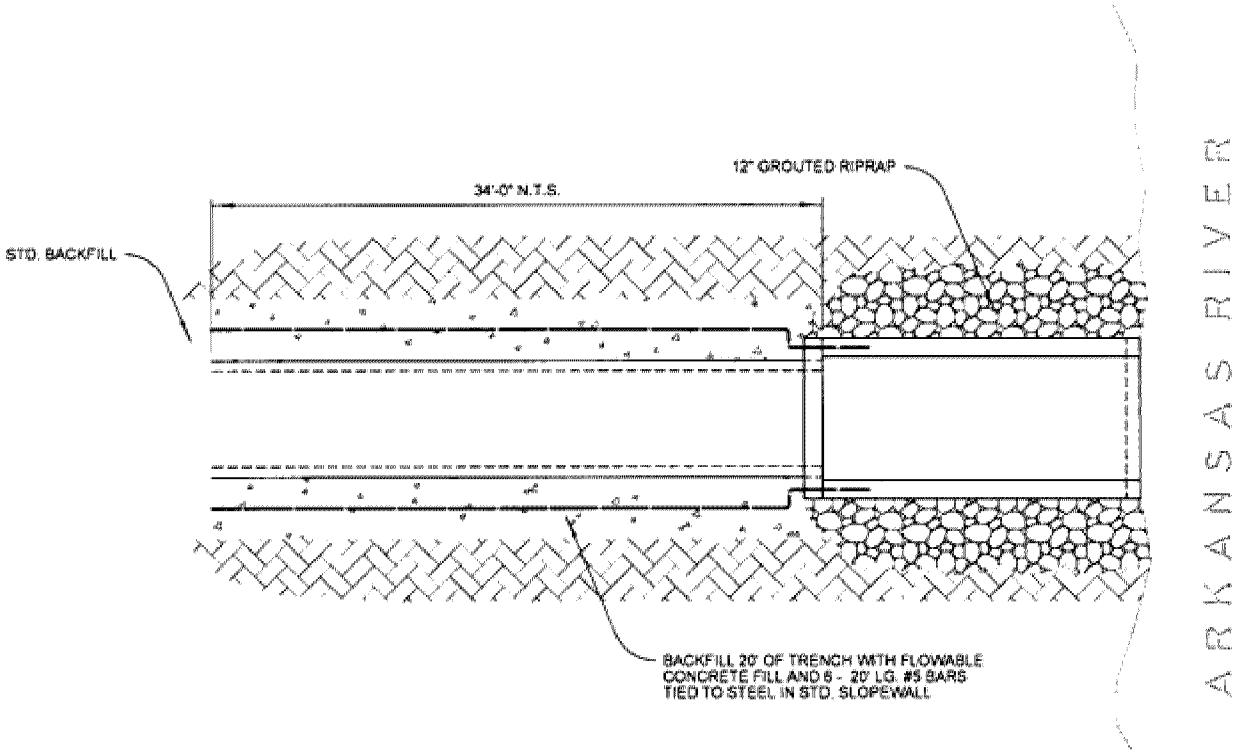

C Arkansas River Outlet Pipe Detail

SCALE: NONE

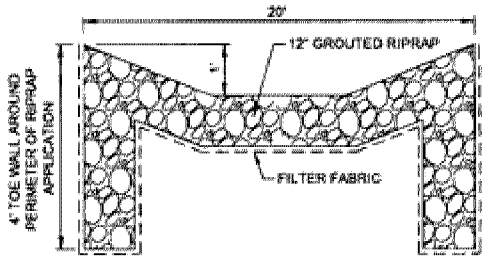

B Grouted Riprap Detail

SCALE: NONE

REVISION	BY	DATE	RIVER BANK OUTFALL DETAIL STANDARD DETAILS	
			CITY OF JENKS, OKLAHOMA	
			PUBLIC WORKS DEPARTMENT	
			DATE: 12/13	STANDARD NO. STRM-12

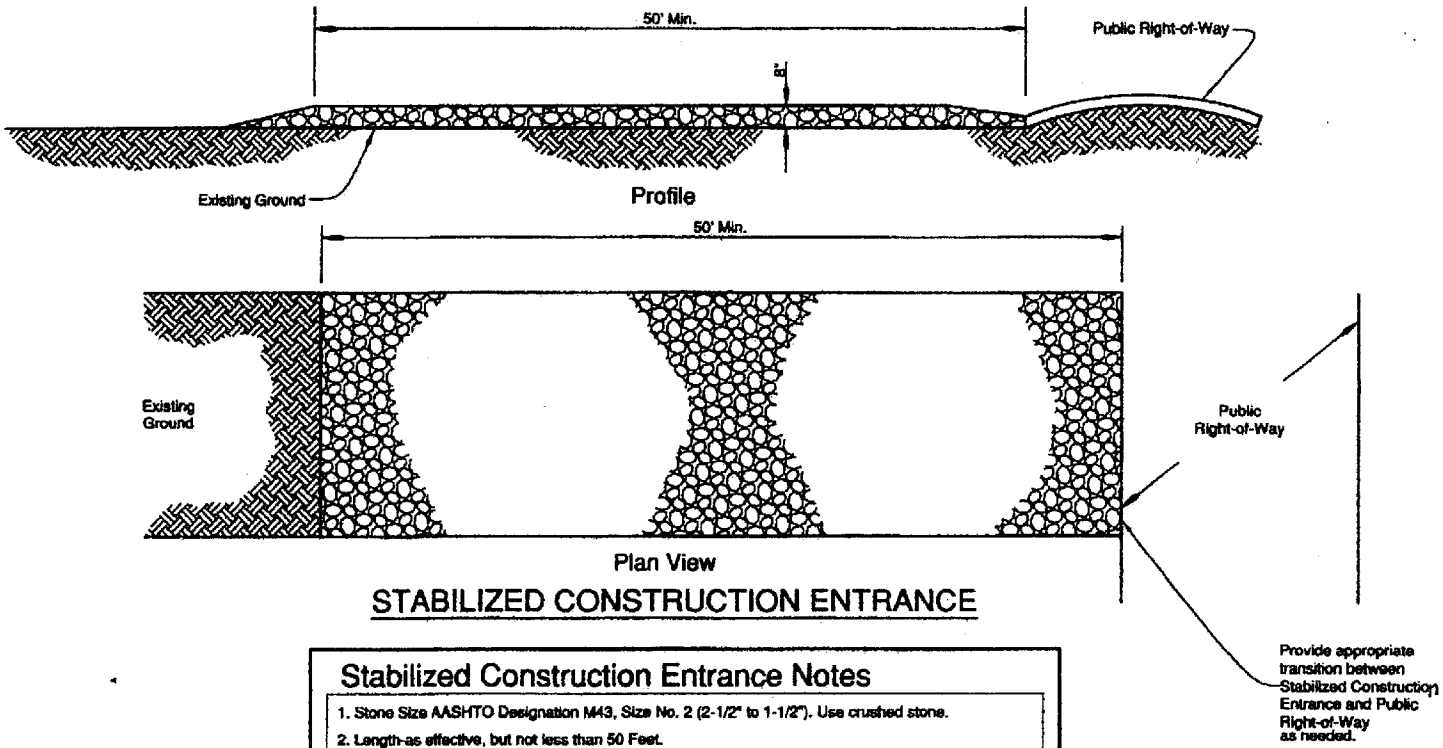

STABILIZED CONSTRUCTION ENTRANCE

Stabilized Construction Entrance Notes

1. Stone Size AASHTO Designation M43, Size No. 2 (2-1/2" to 1-1/2"). Use crushed stone.
2. Length-as effective, but not less than 50 Feet.
3. Thickness-not less than eight (8) inches.
4. Width-not less than full width of all points of ingress or egress.
5. Washing-when necessary, wheels shall be cleaned to remove sediment prior to entrance onto Public Right-of-Way. When washing is Required. It shall be done on an area stabilized with crushed stone. All sediment shall be prevented from entering any storm drain, ditch, or watercourse through use of sand bags, gravel, boards or other approved methods.
6. Maintenance-the entrance shall be maintained in a condition which will prevent tracking or flowing of sediment onto Public Rights-of-Way. This may require periodic top dressing with additional stone as conditions demand and repair and/or cleanout of any measures used to control sediment. All sediment spilled, dropped, washed or tracked onto Public Rights-of-Way must be removed immediately by the Owner.

REVISION	BY	DATE	STABILIZED CONSTRUCTION ENTRANCE	
			STANDARD DETAILS	
			CITY OF JENKS, OKLAHOMA	
			PUBLIC WORKS DEPARTMENT	
			DATE: 12/13	STANDARD NO. STRM-13

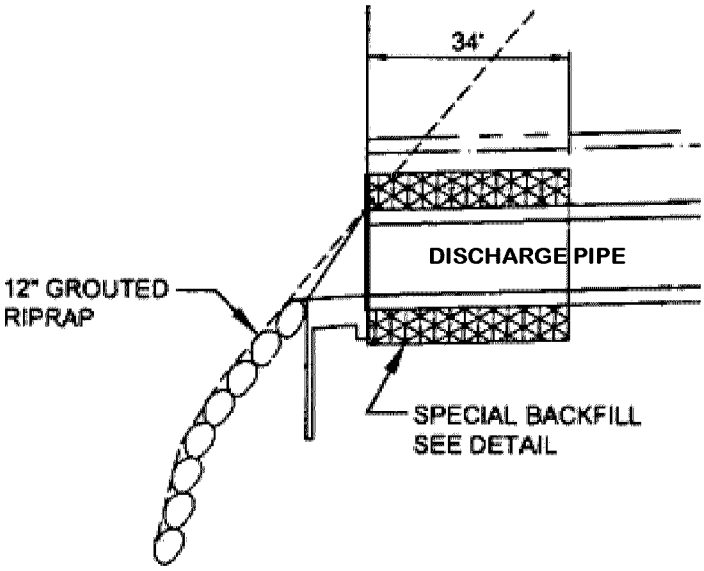

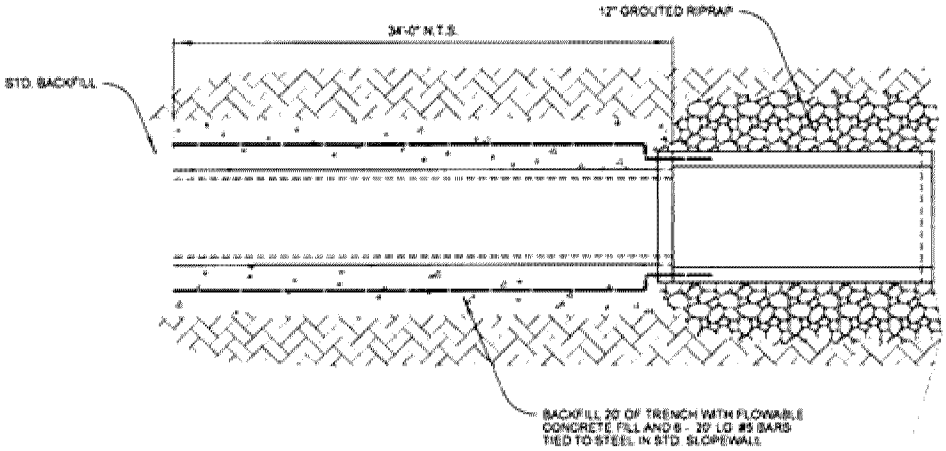

OUTLET PIPE DETAIL

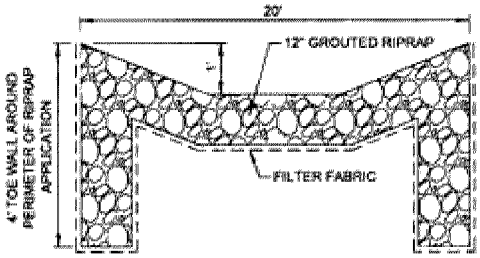

GROUTED RIPRAP DETAIL

REVISION	BY	DATE	OUTLET PIPE DETAIL STANDARD DETAILS	
			CITY OF JENKS, OKLAHOMA	
			PUBLIC WORKS DEPARTMENT	
			DATE: 01/14	STANDARD NO. STRM-14

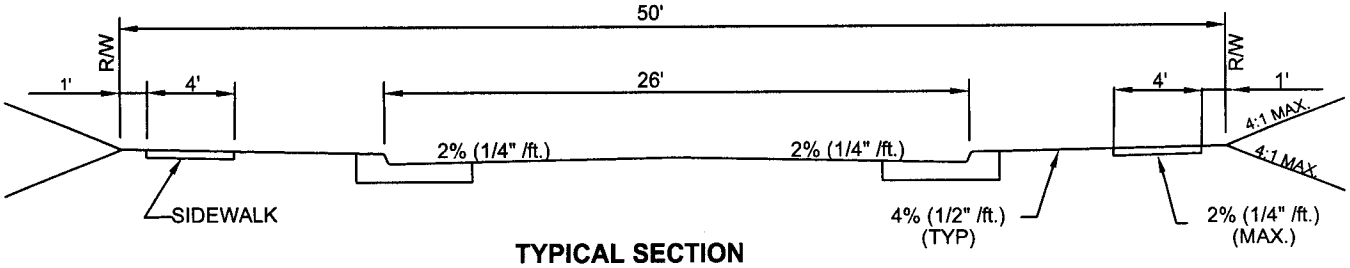

TYPICAL SECTION

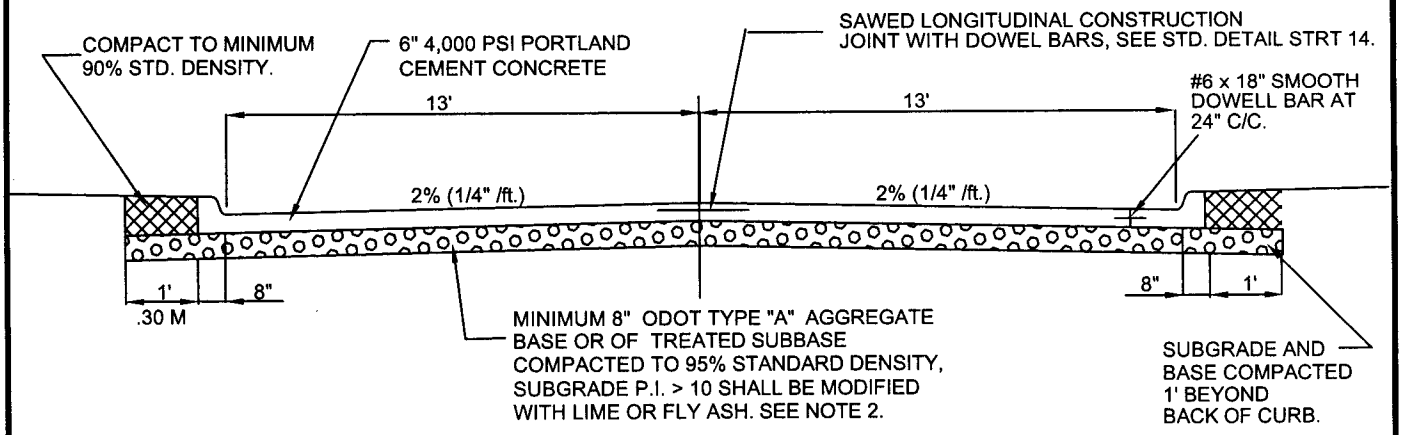

HALF SECTION
INTEGRAL CURB & PAVEMENT

CONCRETE STREET SECTION

HALF SECTION
SEPARATE PLACEMENTS

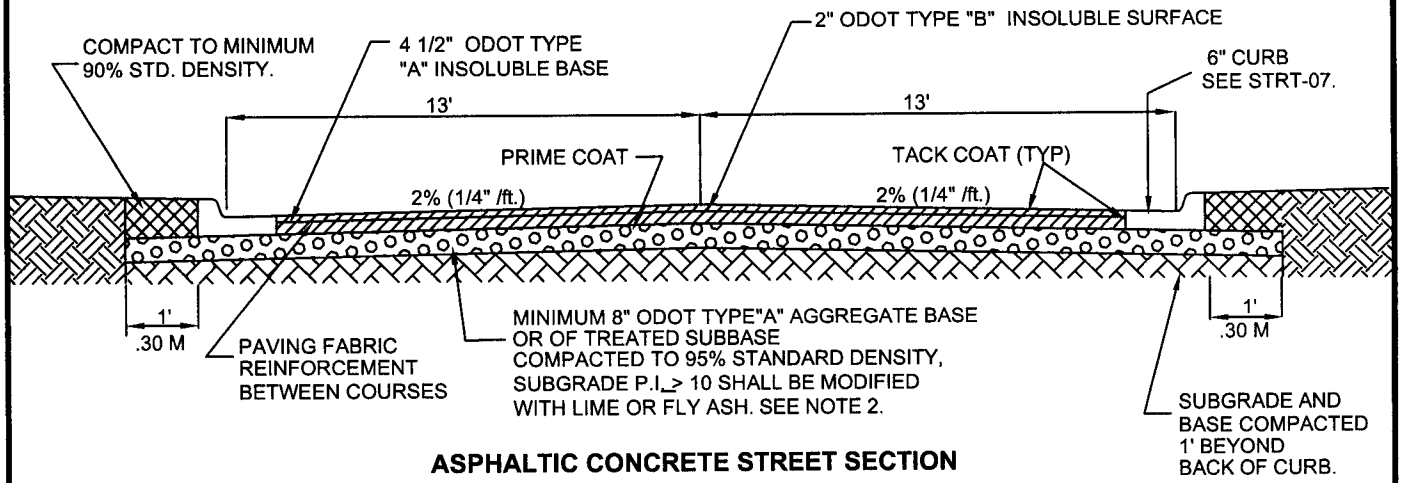

ASPHALTIC CONCRETE STREET SECTION

NOTES:

1. SECTIONS SHOWN ARE MINIMUM REQUIRED. SUBGRADE MAY REQUIRE ADDITIONAL THICKNESS OF MODIFICATION OR A SUBBASE DRAINAGE SYSTEM WHERE SEVERE SOIL CONDITIONS EXIST.
2. FOR EXISTING SUBBASE MATERIAL WITH PI <10 SUBGRADE SHALL BE CLASSIFIED SELECT, INERT MATERIAL OR STABILIZED AND COMPACTED TO 95% STANDARD PROCTOR DENSITY.
3. ASPHALT SURFACES SHALL CONFORM TO ODOT STANDARD 401.04 FOR TOLERANCES

REVISION	BY	DATE

RESIDENTIAL MINOR STREET
STANDARD DETAILS

CITY OF JENKS, OKLAHOMA

ENGINEERING DEPARTMENT

DATE: 12/05 | STANDARD NO. STRT-01

CAD \STANDARD DETAILS\STREETS\STRT-01

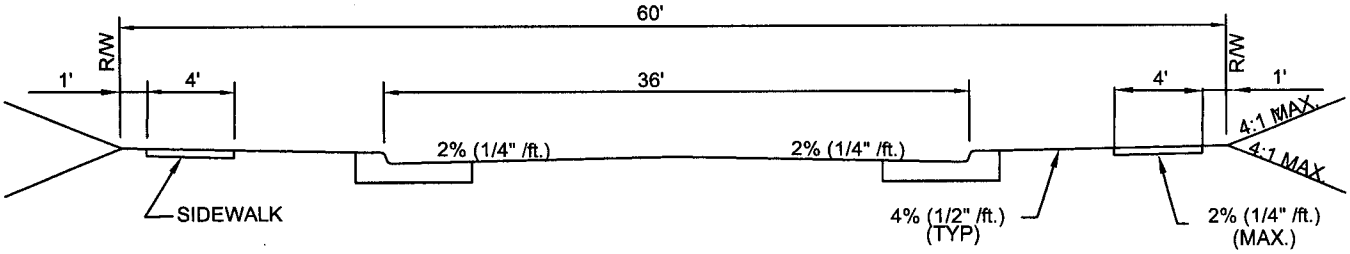

TYPICAL SECTION

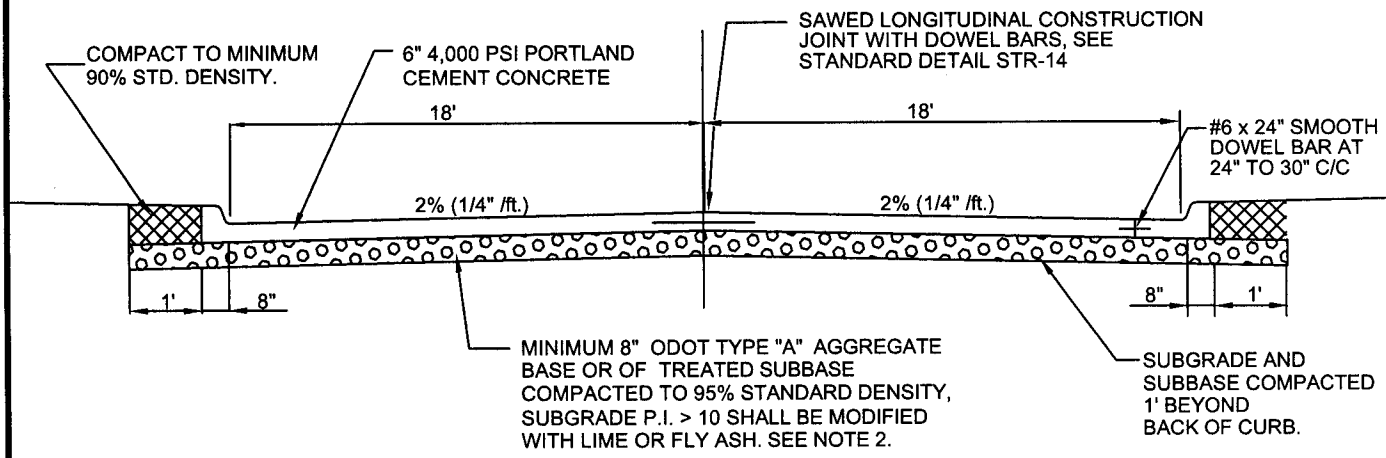

HALF SECTION
INTEGRAL CURB & PAVEMENT

CONCRETE STREET SECTION

HALF SECTION
SEPARATE PLACEMENTS

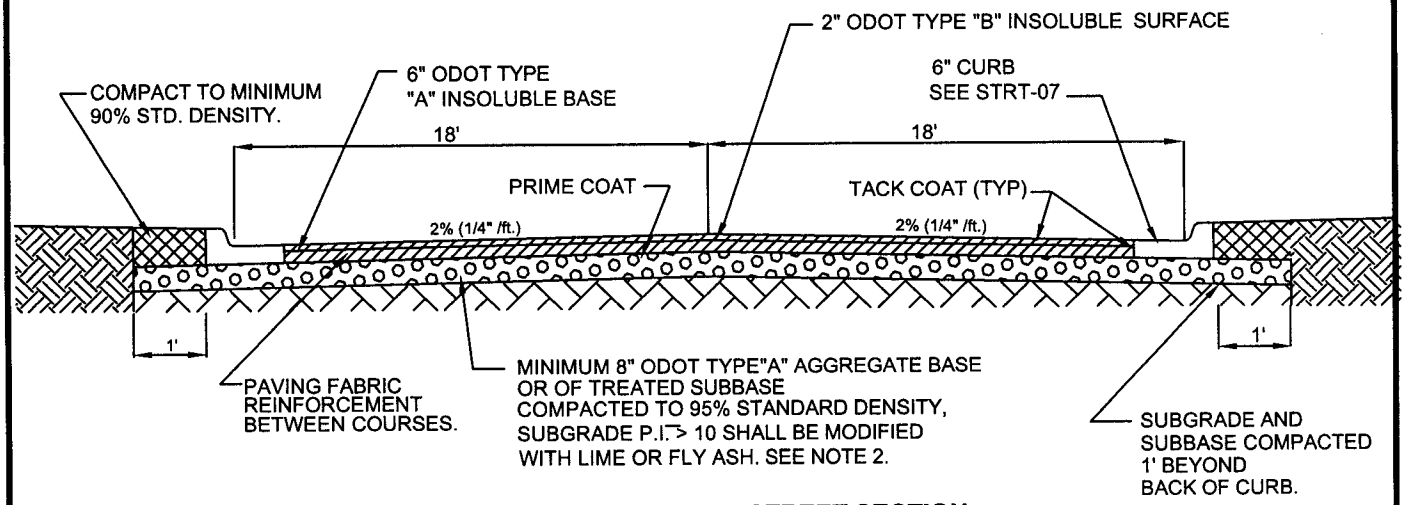

ASPHALTIC CONCRETE STREET SECTION

NOTES:

1. SECTIONS SHOWN ARE MINIMUM REQUIRED. SUBGRADE MAY REQUIRE ADDITIONAL THICKNESS OF MODIFICATION OR A SUBBASE DRAINAGE SYSTEM WHERE SEVERE SOIL CONDITIONS EXIST.
2. FOR EXISTING SUBBASE MATERIAL WITH PI <10 SUBGRADE SHALL BE CLASSIFIED SELECT, INERT MATERIAL OR STABILIZED AND COMPACTED TO 95% STANDARD PROCTOR DENSITY.
3. ASPHALT SURFACES SHALL CONFORM TO ODOT STANDARD 401.04 FOR TOLERANCES

REVISION	BY	DATE

RESIDENTIAL COLLECTOR STREET
STANDARD DETAILS

CITY OF JENKS, OKLAHOMA

ENGINEERING DEPARTMENT

DATE: 12/05 | STANDARD NO. STRT-02

CAD \STANDARD DETAILS\STREETS\STRT-02

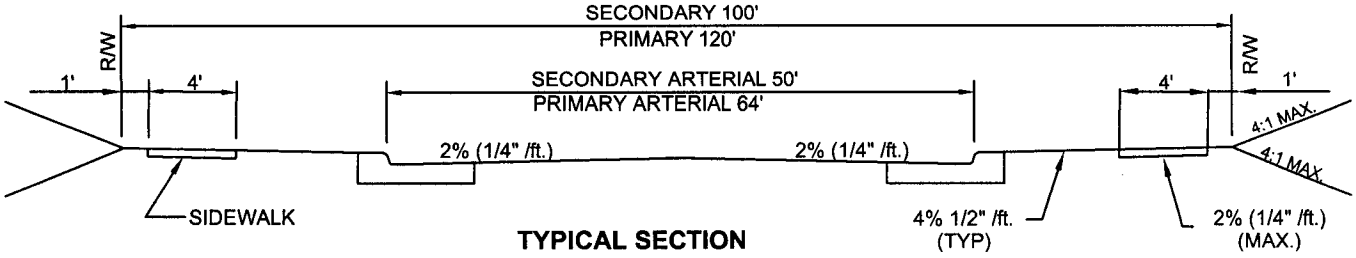

TYPICAL SECTION

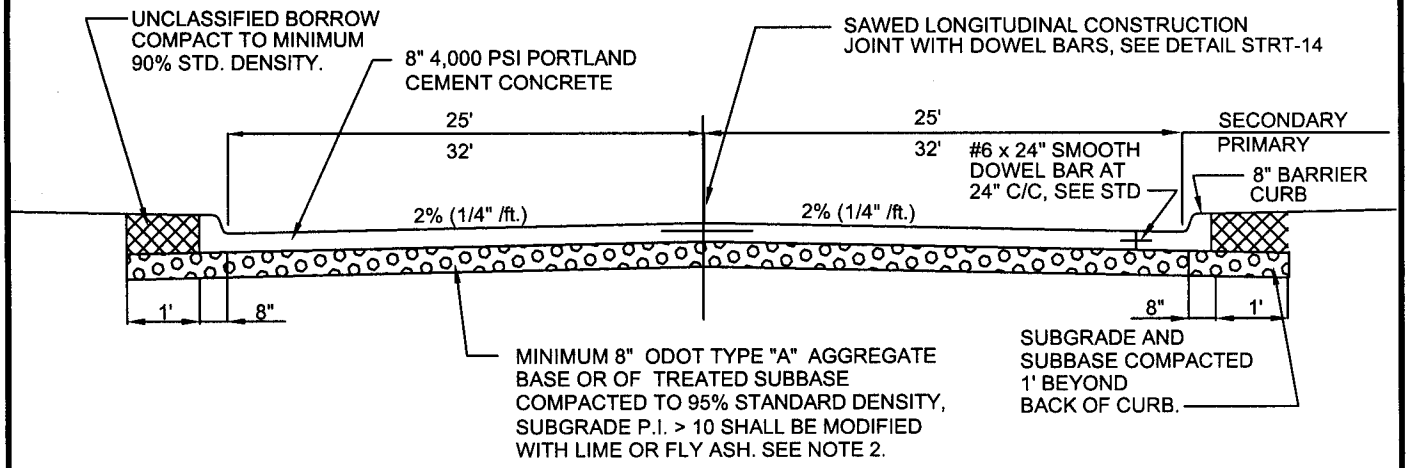

HALF SECTION
INTEGRAL CURB & PAVEMENT

CONCRETE STREET SECTION

HALF SECTION
SEPARATE PLACEMENTS

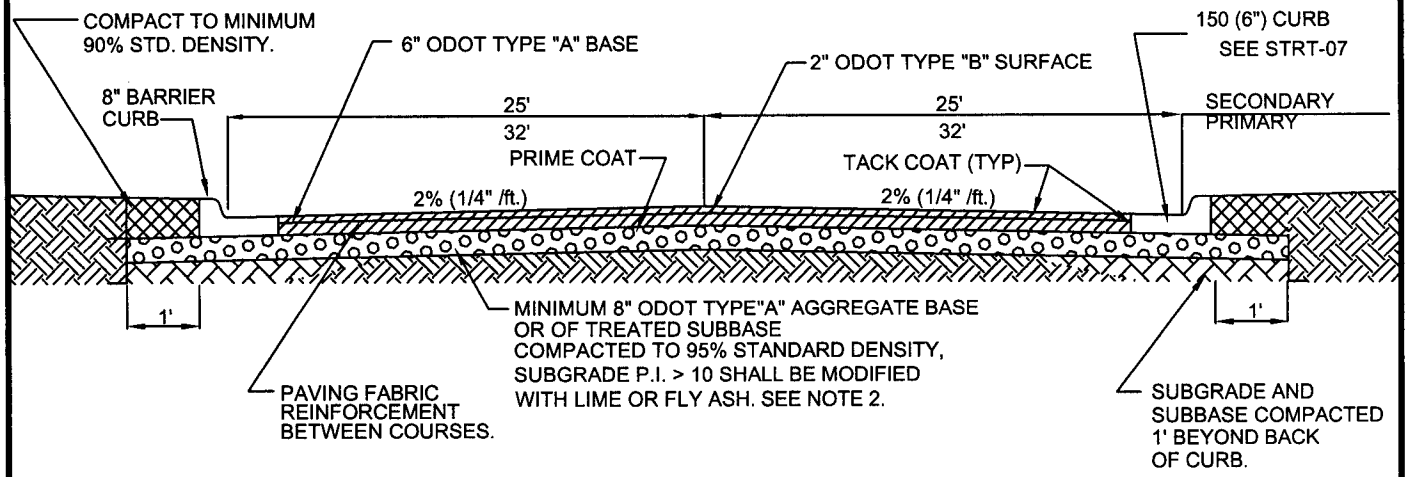

ASPHALTIC CONCRETE STREET SECTION

NOTES:

1. SECTIONS SHOWN ARE MINIMUM REQUIRED. SUBGRADE MAY REQUIRE ADDITIONAL THICKNESS OF MODIFICATION OR A SUBBASE DRAINAGE SYSTEM WHERE SEVERE SOIL CONDITIONS EXIST.
2. FOR EXISTING SUBBASE MATERIAL WITH PI <10 SUBGRADE SHALL BE CLASSIFIED SELECT, INERT MATERIAL OR STABILIZED AND COMPACTED TO 95% STANDARD PROCTOR DENSITY.
3. ASPHALT SURFACES SHALL CONFORM TO ODOT STANDARD 401.04 FOR TOLERANCES

REVISION	BY	DATE

SECONDARY/PRIMARY ARTERIAL STREET
STANDARD DETAILS

CITY OF JENKS, OKLAHOMA

ENGINEERING DEPARTMENT

DATE: 12/05 | STANDARD NO. STRT-03

CAD \STANDARD DETAILS\STREETS\STRT-03

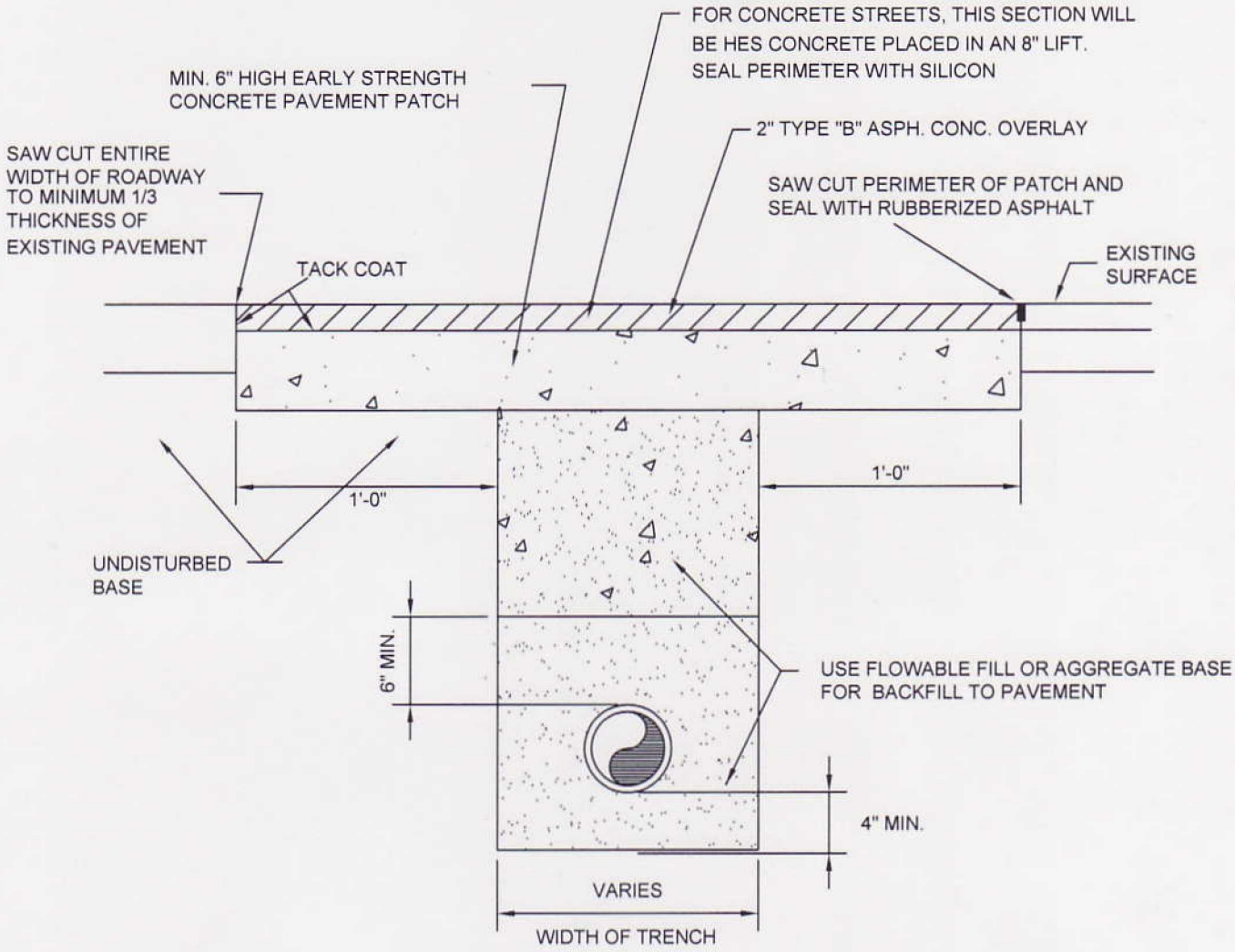

USE THIS DETAIL WHERE IT IS NECESSARY TO CUT THE EXISTING PAVEMENT FOR REMOVAL OR CONSTRUCTION OF AN UNDERGROUND UTILITY

NOTES:

1. CONCRETE TO BE PLACED AS INDICATED ACROSS ENTIRE ROADWAY AND LEFT 2-INCHES BELOW SURFACE. TRENCH TO BE COVERED WITH 1-INCH STEEL PLATES AND ALLOWED TO CURE FOR TWO (2) DAYS PRIOR TO ASPHALT.
2. NEW SURFACE SHALL TRANSITION SMOOTHLY TO EXISTING PAVEMENT.

REVISION	BY	DATE	**STREET REPLACEMENT FOR UTILITIES** STANDARD DETAILS	
			CITY OF JENKS, OKLAHOMA	
			ENGINEERING DEPARTMENT	
			DATE: 02/09	STANDARD NO. STRT- 04

CAD:\STANDARD DETAILS\STREETS\STRT- 04

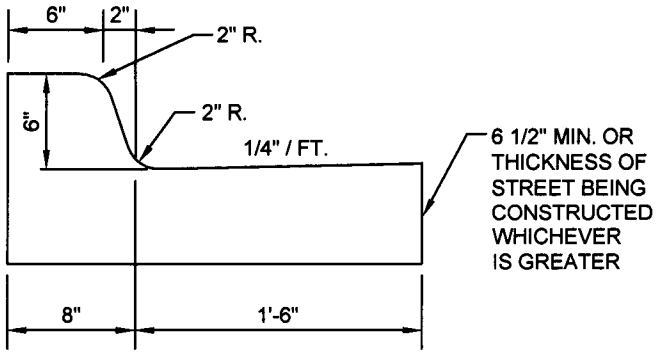

6" BARRIER CURB & GUTTER

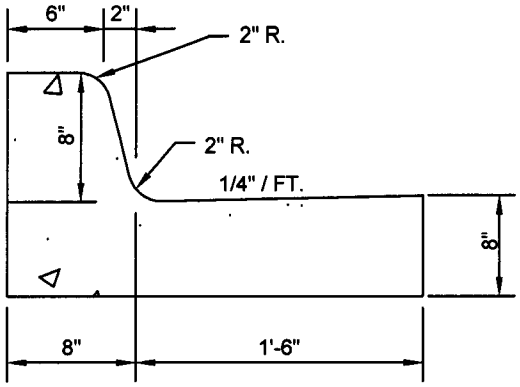

8" BARRIER CURB & GUTTER

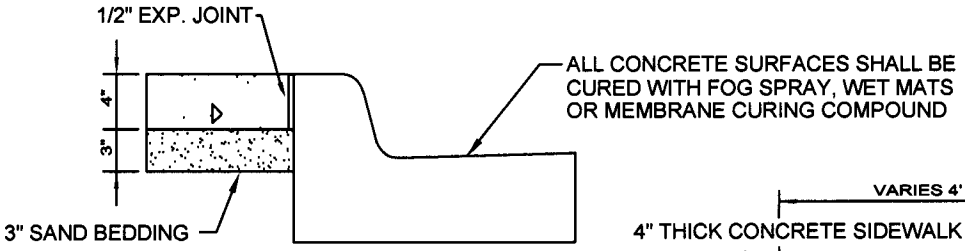

SIDEWALK ADJACENT TO CURB

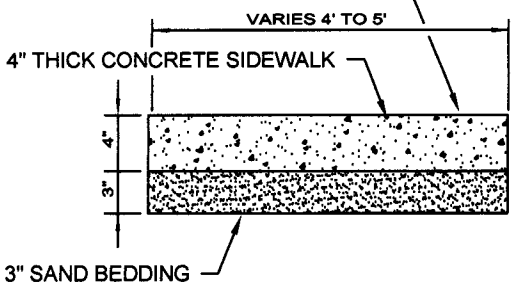

SIDEWALK DETAIL

NOTES:

1. #6 X 24" DOWELS AT 24"-30" MAX C/C REQUIRED WHEN PAVMENT SECTION IS NOT PLACED INTEGRALLY WITH CURB AND GUTTER.
2. FOR ASPHALTIC CONCRETE PAVEMENTS, SAW CURB AND GUTTER JOINTS 10'-15' MAX C/C WITH EVERY 8TH JOINT A 3/4" EXPANSION JOINT. FOR CONCRETE PAVEMENTS, CURB JOINT SHALL MATCH PAVEMENT JOINTS.

REVISION	BY	DATE

CURB, GUTTER AND SIDEWALK
STANDARD DETAILS

CITY OF JENKS, OKLAHOMA
PUBLIC WORKS DEPARTMENT

DATE: 07/09 | STANDARD NO. STRT-05

CAD:\STANDARD DETAILS\STREETS\Curbs\STRT-05

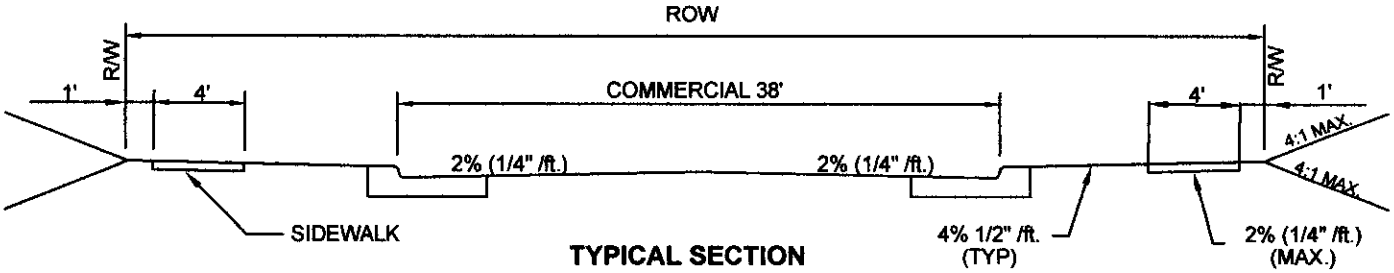

TYPICAL SECTION

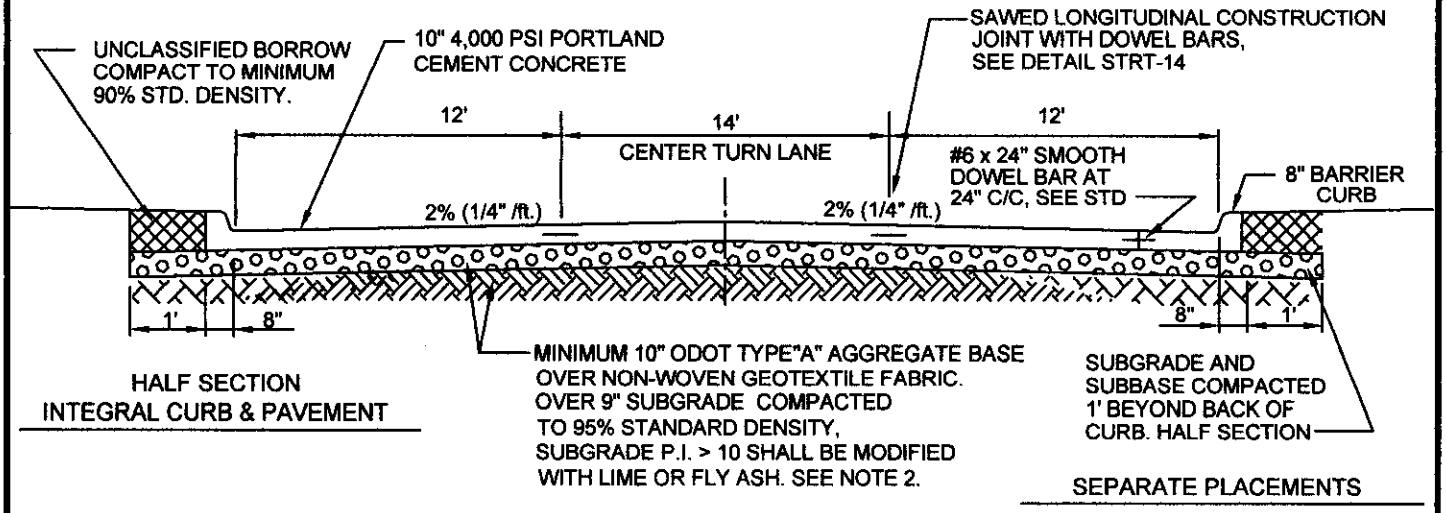

CONCRETE STREET SECTION

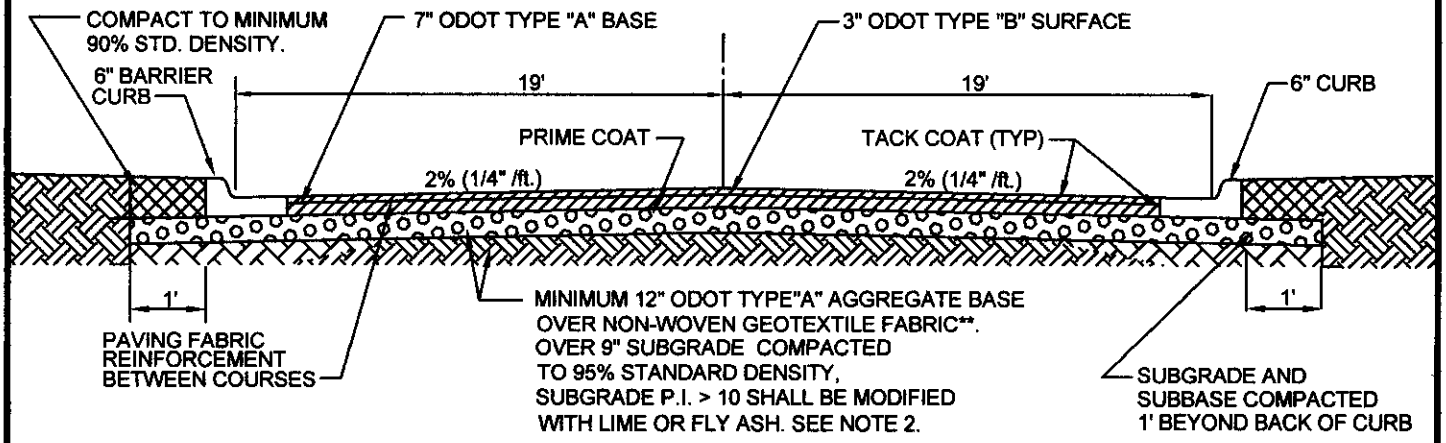

ASPHALTIC CONCRETE STREET SECTION

NOTES:

1. SECTIONS SHOWN ARE MINIMUM REQUIRED. SUBGRADE MAY REQUIRE ADDITIONAL THICKNESS OF MODIFICATION OR A SUBBASE DRAINAGE SYSTEM WHERE SEVERE SOIL CONDITIONS EXIST.
2. FOR EXISTING SUBGRADE MATERIAL WITH PI <10 SUBGRADE SHALL BE CLASSIFIED SELECT, INERT MATERIAL OR STABILIZED AND COMPACTED TO 95% STANDARD PROCTOR DENSITY.
3. ASPHALT SURFACES SHALL CONFORM TO ODOT STANDARD 401.04 FOR TOLERANCES AND STANDARD DETAIL STRT-08 FOR TEXTURE.
4. IF A COMPACTED AGGREGATE SUBBASE IS USED, THE AGGREGATE SHALL BE PLACED ON SEPARATOR FABRIC.

REVISION	BY	DATE

COMMERCIAL/ INDUSTRIAL COLLECTOR STREET
STANDARD DETAILS

CITY OF JENKS, OKLAHOMA

ENGINEERING DEPARTMENT

DATE: 05/13 | STANDARD NO. STRT-06

CAD \STANDARD DETAILS\STREETS\STRT-06

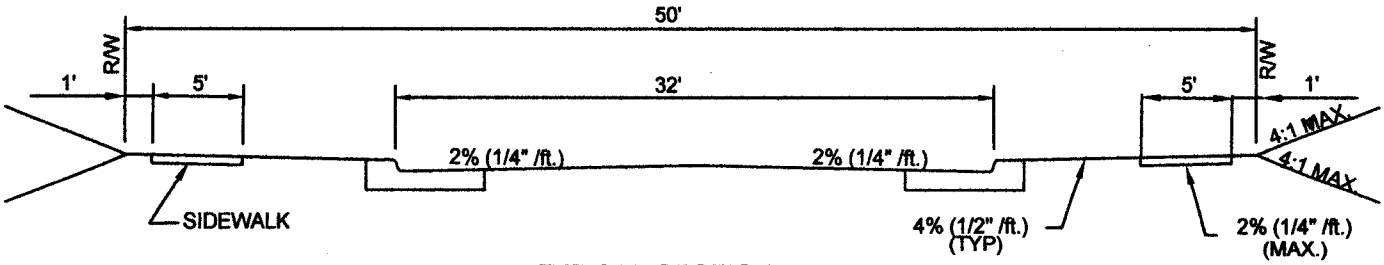

TYPICAL SECTION

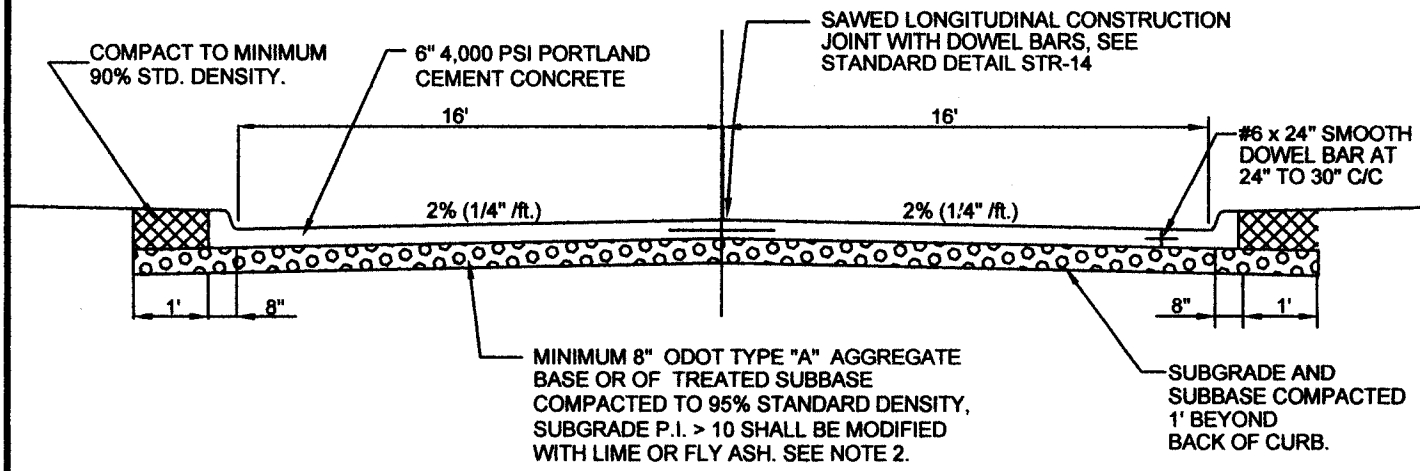

HALF SECTION
INTEGRAL CURB & PAVEMENT

CONCRETE STREET SECTION

HALF SECTION
SEPARATE PLACEMENTS

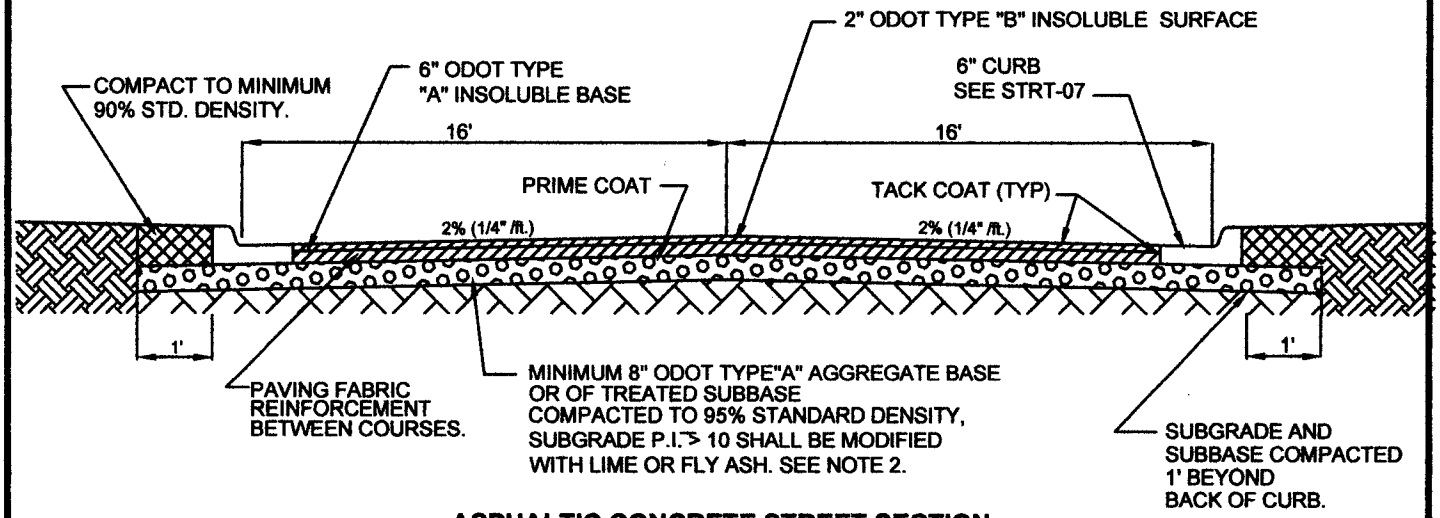

ASPHALTIC CONCRETE STREET SECTION

NOTES:

1. SECTIONS SHOWN ARE MINIMUM REQUIRED. SUBGRADE MAY REQUIRE ADDITIONAL THICKNESS OF MODIFICATION OR A SUBBASE DRAINAGE SYSTEM WHERE SEVERE SOIL CONDITIONS EXIST.
2. FOR EXISTING SUBBASE MATERIAL WITH PI <10 SUBGRADE SHALL BE CLASSIFIED SELECT, INERT MATERIAL OR STABILIZED AND COMPACTED TO 95% STANDARD PROCTOR DENSITY.
3. ASPHALT SURFACES SHALL CONFORM TO ODOT STANDARD 401.04 FOR TOLERANCES

REVISION	BY	DATE

COMMERCIAL COLLECTOR STREET
STANDARD DETAILS

CITY OF JENKS, OKLAHOMA

ENGINEERING DEPARTMENT

DATE: 05/13 | STANDARD NO. STRT-07

CAD \STANDARD DETAILS\STREETS\STRT-07

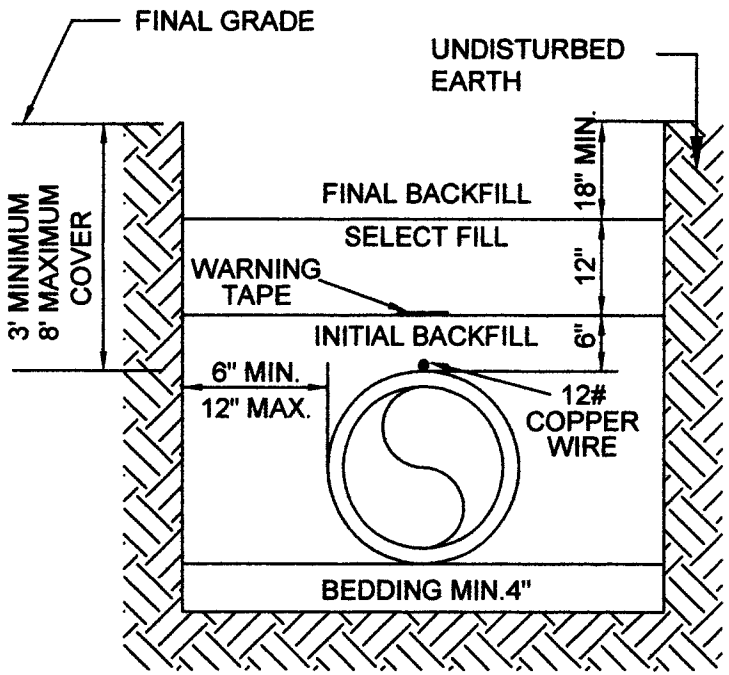

WATER PIPE BEDDING

NON-PAVED AREAS	PAVED AREAS
EXCAVATED MATERIAL	CRUSHED ROCK
SAND	SAND
SAND	SAND
SAND	SAND

NOTES:
1. SELECT FILL CONSISTS OF EXCAVATED MATERIALS CONTAINING NO ROCKS LARGER THAN 2 INCHES.
2. CRUSHED ROCK SHALL BE ODOT TYPE "A" BASE
3. COMPACTION REQUIREMENTS:
   a. NON- PAVED AREAS: 90% MAXIMUM STANDARD PROCTOR DENSITY FOR COHESIONLESS SOILS AND 85% FOR COHESIVE SOILS.
   b. PAVED AREAS: 95% MAXIMUM STANDARD PROCTOR DENSITY FOR COHESIONLESS SOILS.
4. FLOWABLE FILL MAY BE SUBSTITUTED FOR SELECT FILL IN ROAD CROSSING.
5. IN AREAS WHERE WATER INFILTRATION CANNOT BE CONTROLLED BEDDING AND INITIAL BACKFILL SHALL BE MATERIAL CONFORMING TO ODOT SECTION 703.04(A).
6. PIPE MATERIAL SHALL BE DIP C151 (CLASS 150) OR PVC AWWA C900 DR14 (PC-200).
7. PIPE JOINTS WITHIN 30 FEET OF FITTING OR VALVE SHALL BE MECHANICALLY-RESTRAINED.
8. A #12 COPPER TRACER WIRE SHALL BE PLACED ON PVC PIPE AND ATTACHED TO ALL FIRE HYDRANTS AND VALVES.
9. PLACE A MYLAR WARNING TAPE (MARKED "WATER LINE") ATOP THE INITIAL BACKFILL FOR THE ENTIRE LENGTH OF THE LINE.

NOTE: ALL WATER LINES UNDER PAVEMENT SHALL BE SLEEVED.

REVISION	BY	DATE

WATER PIPE INSTALLATION
STANDARD DETAILS

CITY OF JENKS, OKLAHOMA
PUBLIC WORKS DEPARTMENT

DATE: 06/13 (Rev)
STANDARD NO. WAT-01

CAD:\STANDARD DETAILS\WATER\Water Pipe Installation

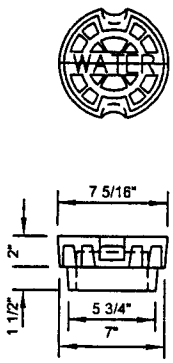

LID

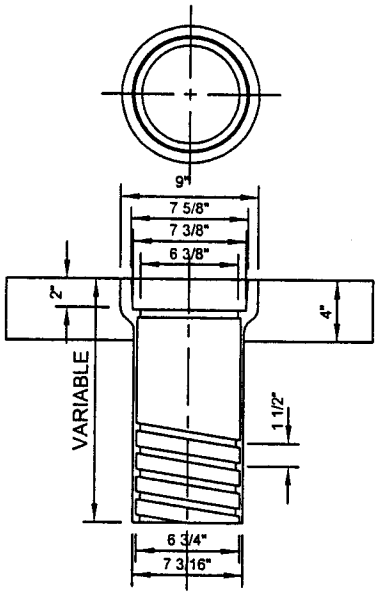

TOP

4" - 12" VALVE BOX DETAIL

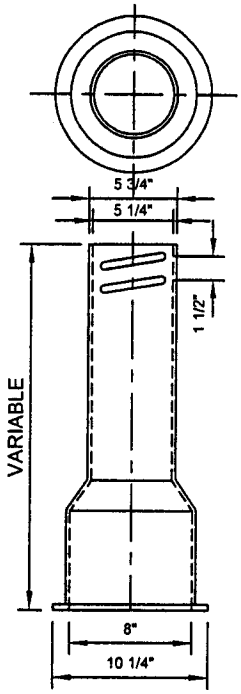

BOTTOM

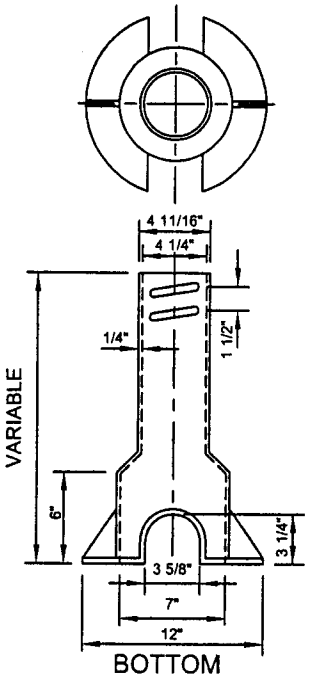

BOTTOM

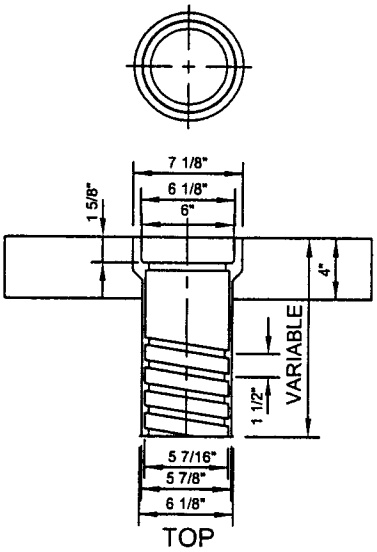

TOP

2" - 3" VALVE BOX DETAIL

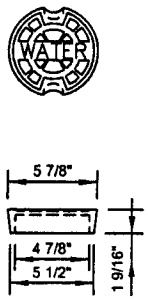

LID

NOTES:

1. IN PAVED AREAS, WATER LINE CONTRACTOR TO PLACE 2 FOOT SQUARE CONCRETE PAD AROUND EACH WATER VALVE AFTER PAVING IS COMPLETE . THE PAVEMENT SHALL BE SAW-CUT FOR PAD PLACEMENT.
2. VALVE BOXES REQUIRING OVER 2 ADDITIONAL BOTTOM SECTIONS SHALL BE EXTENDED USING PVC PIPE WITH A BOTTOM AND TOP SECTION PLACED ON TOP OF THE PVC PIPE.

REVISION	BY	DATE

VALVE BOX DETAIL

STANDARD DETAILS

CITY OF JENKS, OKLAHOMA

PUBLIC WORKS DEPARTMENT

DATE: 01/05 STANDARD NO. WAT-02

CAD:\STANDARD DETAILS\WATER\Valve Box

NOTE:
1. (2) 2-1/2" NATIONAL STANDARD THREAD (NST) HOSE NOZZLE
2. (1) 4-1/2" (NTS) PUMPER NOZZLE
3. 1-1/2" PENTAGON OPERATING NUT OPEN LEFT
4. CAPS TO BE EQUIPPED WITH CHAINS.
5. A #12 COPPER TRACER WIRE SHALL BE CONNECTED FROM THE PVC MAIN TO THE HYDRANT TRAFFIC FLANGE
6. HYDRANT TO BE OIL FILLED.
7. ACCEPTABLE BRANDS INCLUDE: AMERICAN DARLING, AVK, KENNEDY, AND MUELLER.

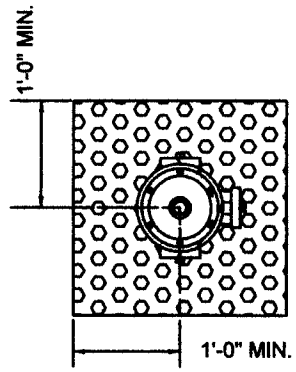

TOP VIEW

(AGGREGATE BASE)

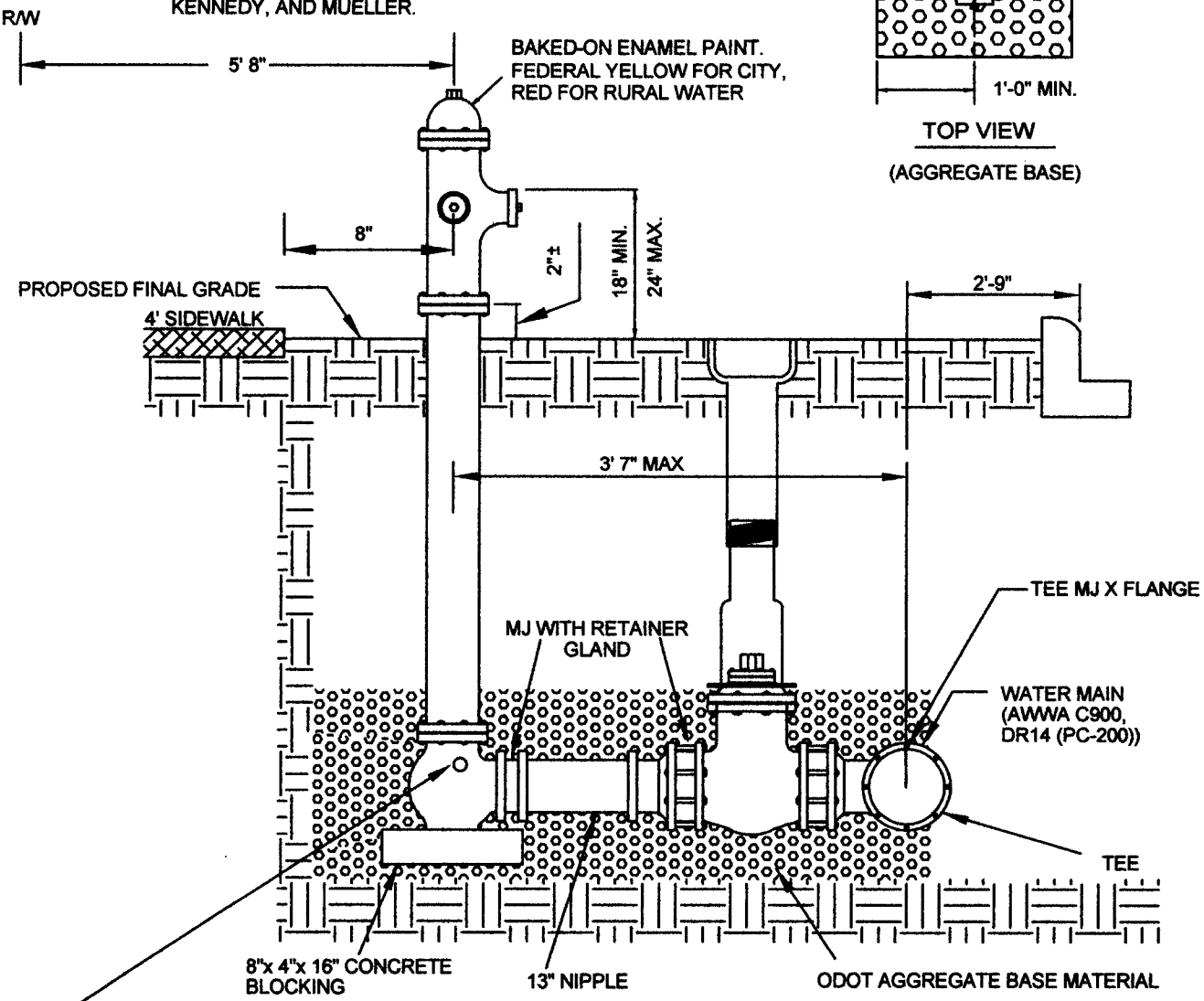

SIDE VIEW

NOTE:
HYDRANT DRAIN MUST BE LEFT CLEAN. ALL MECHANICAL-RESTRAINED JOINTS. NO CONCRETE THRUST BLOCKING.

REVISION	BY	DATE

INSTALLATION OF 3-WAY FIRE HYDRANT
STANDARD DETAILS

CITY OF JENKS, OKLAHOMA

PUBLIC WORKS DEPARTMENT

DATE: 06/13 (Rev) | STANDARD NO. WAT-03

CAD:\STANDARD DETAILS\WATER\Fire Hydrant

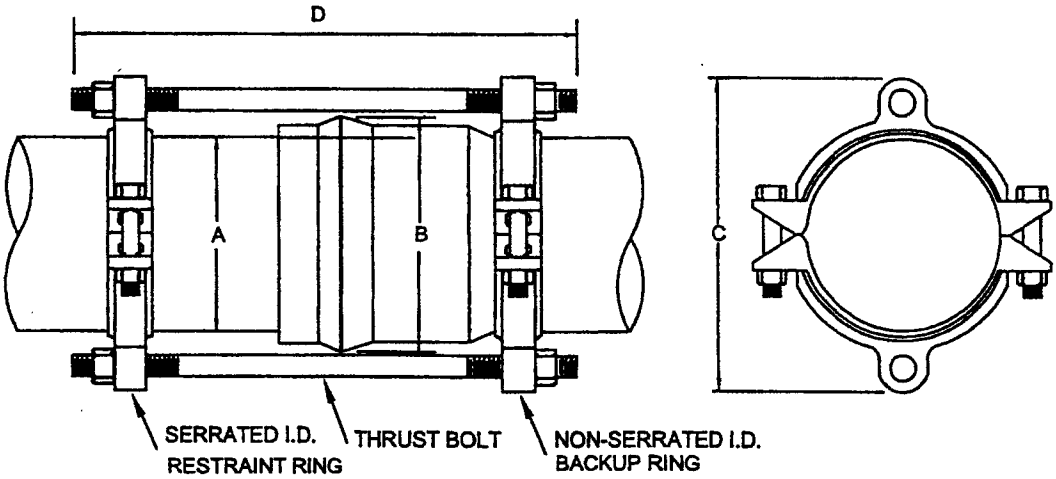

NOMINAL PIPE SIZE	A PIPE O.D.	B MAXIMUM BELL O.D. CLEARED	C MAX. RESTRAINT O.D. (CASING CLEARED)	D OVER ALL LENGTH	THRUST BOLT (NUMBER-SIZE)
4	4.80	6.75	9.25	13	2- 3/4X13
6	6.90	8.75	11.25	18	2- 3/4X18
8	9.05	12.25	14.75	18	2- 3/4X18
10	11.10	14.20	16.85	22	4- 3/4X22
12	13.20	16.90	19.45	22	4- 3/4X22

SPECIFICATION

RESTRAINT FOR PVC PIPE BELL (AWWA C900) SHALL CONSIST OF THE FOLLOWING: THE RESTRAINT SHALL BE MANUFACTURED OF DUCTILE IRON CONFORMING TO ASTM A536. A SPLIT RING SHALL BE UTILIZED BEHIND THE PIPE BELL. A SERRATED RING SHALL BE USED TO GRIP THE PIPE AND A SUFFICIENT NUMBER OF BOLTS SHALL BE USED TO CONNECT THE BELL RING AND THE GRIPPING RING. THE COMBINATION SHALL HAVE A MINIMUM WORKING PRESSURE RATING EQUIVALENT TO THE PIPE.

PRESSURE RATING (C900)

NOMINAL PIPE SIZE	DR14 CLASS 200	DR18 CLASS 150
4	200	150
6	200	150
8	200	150
10	200	150
12	200	150

REVISION	BY	DATE

MECHANICAL RESTRAINT FOR JOINTS
STANDARD DETAILS

CITY OF JENKS, OKLAHOMA

PUBLIC WORKS DEPARTMENT

DATE: 02/08 STANDARD NO. WAT-04

CAD:\STANDARD DETAILS\WATER\WAT-17

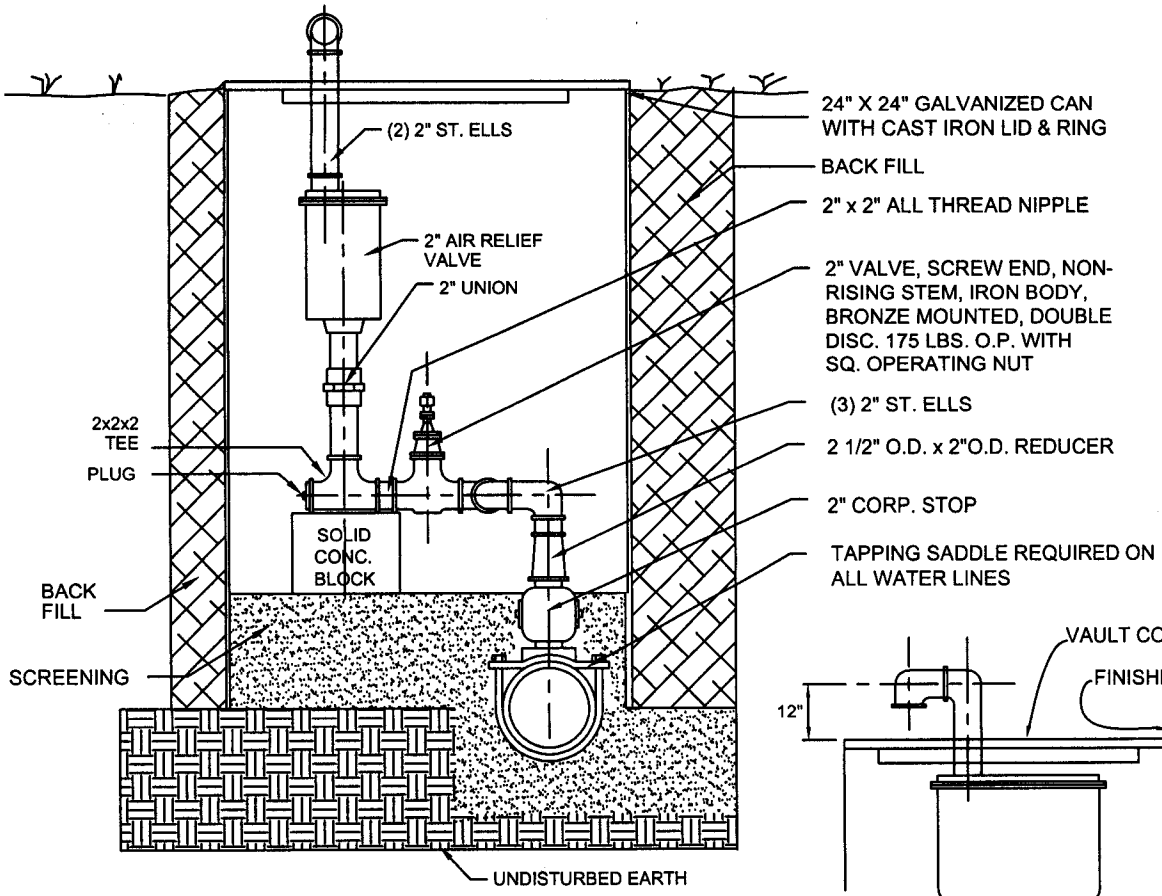

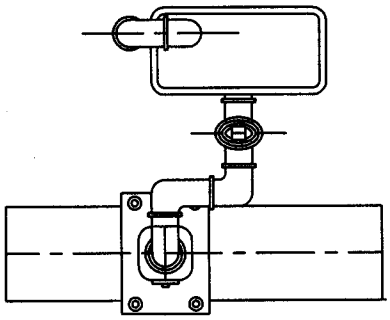

TOP VIEW

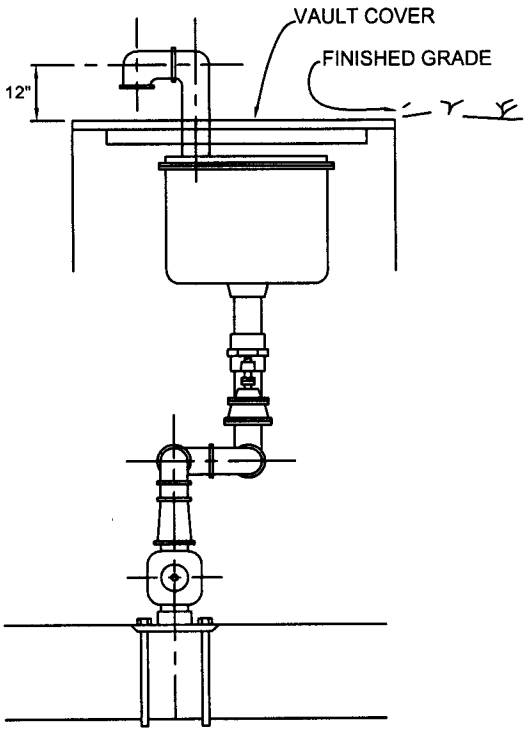

SIDE VIEW

NOTES:
1. ALL PIPING AND CONNECTORS SHALL BE BRONZE, EXCEPT TAPPING SADDLE.
2. STAINLESS STEEL BOLTS WILL BE USED ON TAPPING SADDLES.
3. FRAME AND LID FOR VAULT SHALL BE AS SHOWN ON STANDARD DRAWING WAT- 10.
4. PROVIDE PROTECTION (BARRIER) TO PREVENT DAMAGE TO THE ABOVE-GROUND RISER PIPE.

REVISION	BY	DATE

AIR RELIEF VALVE AND VAULT
STANDARD DETAILS

CITY OF JENKS, OKLAHOMA
PUBLIC WORKS DEPARTMENT

DATE: 02/08 | STANDARD NO. WAT-05

CAD:\STANDARD DETAILS\WATER\WAT-13